SUBMITTAL DATA SHEET

Sump, Sewage, & Effluent Pumps

DuraMAC™ I Guardian

5050CVSP & 5050CUSP25 Sump Pump



5 YEAR LIMITED WARRANTY

See Pumps & Accessories Price List for Limited Warranty details.

With a rugged cast iron construction, the 5050CVSP and 5050CUSP25 can handle up to 70 gallons per minute.

Sump Pump Performance Curve

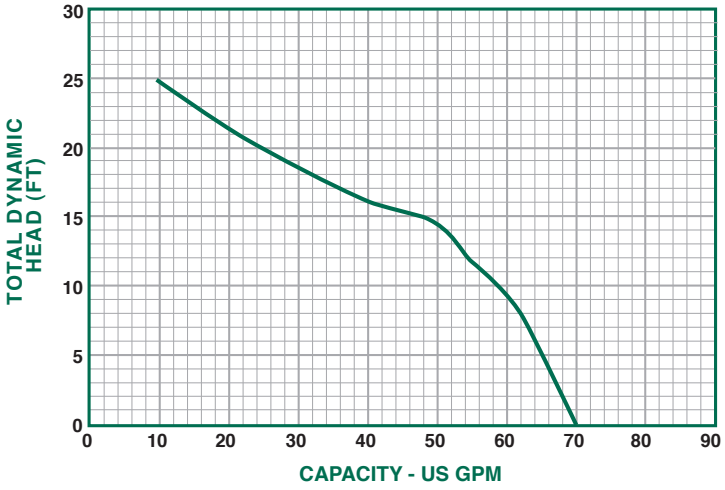

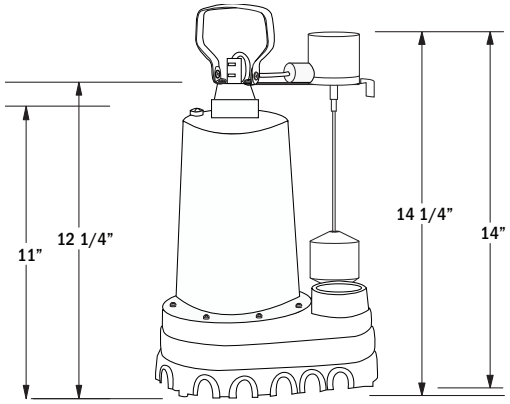

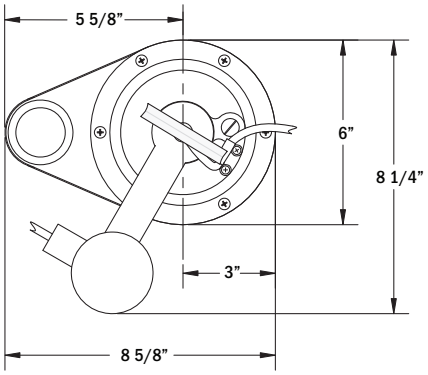

PERFORMANCE CHART

Model	Gallons per Minute in Feet					
	0	5	10	15	20	25
5050CUSP25 5050CVSP	70	66	58	48	25	10

SUBMERSIBLE CAST IRON SUMP PUMP - 1 1/2" DISCHARGE

Model	HP	Volts	Hz	Amps	Construction	Discharge Size	Cord Length	Solids Handling	RPM	Phase
5050CVSP	1/2	120	60	7.6	Cast Iron	1 1/2"	10'	1/2"	3450	1
5050CUSP25 (NO SWITCH)	1/2	120	60	7.6	Cast Iron	1 1/2"	25'	1/2"	3450	1

SUBMITTAL INFORMATION

- Split Capacitor Motor - 1/2 HP continuous duty, thermal protected
- Lifts water up to 25' of vertical height
- 10' power cord, 25' cords are available at an additonal charge
- Large 1 1/2" discharge for high capacity pumping
- Also available without a switch
- Clog resistant impeller
- Vertical float switch

NO-LEAD: The weighted average of the wetted surface of this no-lead product contacted by consumable water contains less than one quarter of one percent (0.25%) lead.

EST. 1856 McDonald

A.Y. McDonald Mfg. Co.
P.O. Box 508
Dubuque, IA 52004-0508

Toll Free: 1-800-292-2737
Fax: 1-800-832-9296
Hours: 7:00 a.m. - 5:00 p.m., CST

sales@aymcdonald.com
www.aymcdonald.com

A.Y. McDonald considers the information on this assembly drawing correct when published. Item and option availability, including specifications, are subject to change without notice.

Submitted by: