SUBMITTAL DATA SHEET

21000 Series

4” No-Lead Brass Submersible Pumps

J Series - 5 GPM



All J Series No-Lead Pumps come with a 1 1/4” discharge and sizes range from 1/3 to 1 1/2 horse power (HP). Two or three wire models up to 1 1/2 horse power (HP).

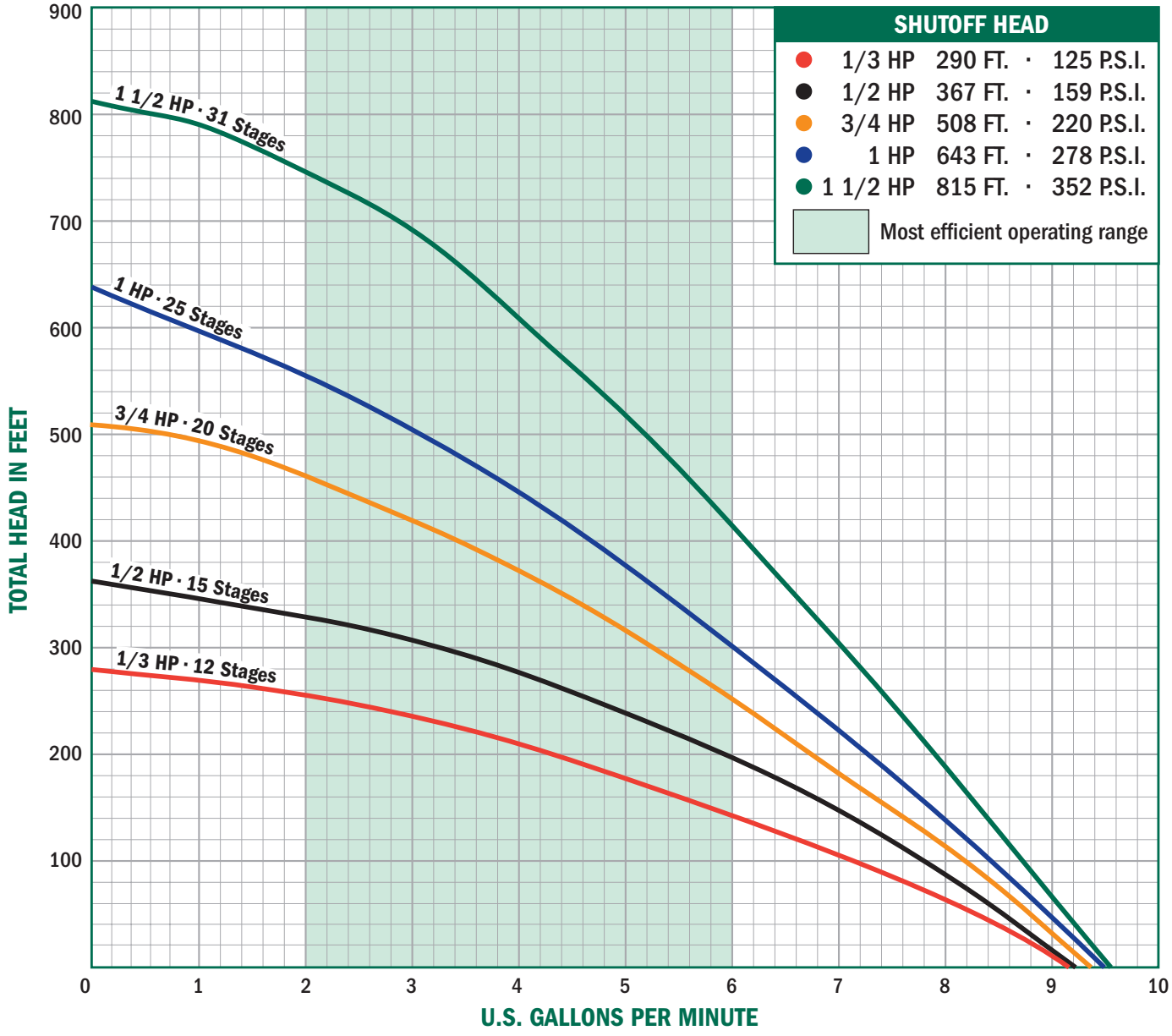

NO-LEAD: The weighted average of the wetted surface of this no-lead product contacted by consumable water contains less than one quarter of one percent (0.25%) lead.

A.Y. McDonald Mfg. Co.
P.O. Box 508
Dubuque, IA 52004-0508

Toll Free: 1-800-292-2737
Fax: 1-800-832-9296
Hours: 7:00 a.m. - 5:00 p.m., CST

sales@aymcdonald.com
www.aymcdonald.com

A.Y. McDonald considers the information on this assembly drawing correct when published. Item and option availability, including specifications, are subject to change without notice.

Submitted by:

SUBMITTAL DATA SHEET

21000 Series
4" No-Lead Brass Submersible Pumps

J Series - 5 GPM



All J Series No-Lead Pumps come with a 1 1/4" discharge and sizes range from 1/3 to 1 1/2 horse power (HP). Two or three wire models up to 1 1/2 horse power (HP).

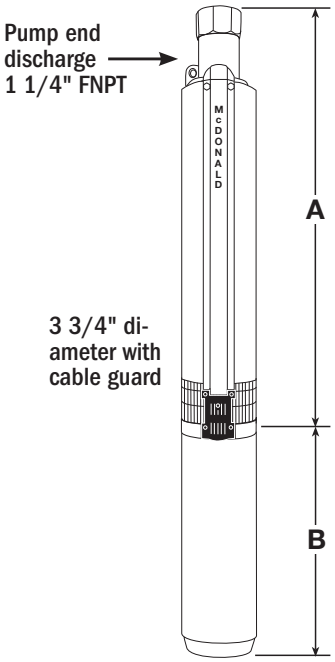

Models Available

Two Wire Single Phase

Model No.	HP	Stages	Volt	A	B	Wt.
21030J2A*	1/3	12	115	17.11"	9.53"	28
21030J2*	1/3	12	230	17.11"	9.53"	28
21050J2A	1/2	15	115	19.46"	9.53"	32
21050J2	1/2	15	230	19.46"	9.53"	32
21075J2	3/4	20	230	24.69"	10.66"	38
21100J2	1	25	230	28.59"	11.75"	43
21150J2	1 1/2	31	230	33.28"	15.12"	51

Three Wire** Single Phase

Model No.	HP	Stages	Volt	A	B	Wt.
21030J3A*	1/3	12	115	17.11"	9.53"	28
21030J3*	1/3	12	230	17.11"	9.53"	28
21050J3A	1/2	15	115	19.46"	9.53"	32
21050J3	1/2	15	230	19.46"	9.53"	32
21075J3	3/4	20	230	24.69"	10.66"	38
21100J3	1	25	230	28.59"	11.75"	43
21150J3	1 1/2	31	230	33.28"	13.28"	43

Three Wire** Three Phase

Model No.	HP	Stages	Volt	A	B	Wt.
21150J3Z	1 1/2	31	230	33.28"	11.75"	47
21150J3Y	1 1/2	31	460	33.28"	11.75"	47

*All one-third horsepower pumps are furnished with one-half horsepower motors (and control boxes where applicable).
**All three wire pumps are available in three phase by selecting pump end and appropriate motor and contactor.

Output - in Gallons Per Minute (Depth to Water)

	PSI	25'	50'	75'	100'	125'	150'	175'	200'	225'	250'
1/3 HP	0	9.0	8.5	7.8	7.1	6.5	5.8	5.2	4.5	3.5	2.1
	30	7.3	6.6	6.0	5.3	4.6	3.8	2.7			
	50	6.1	5.4	4.7	3.9	3.0	1.0				

	PSI	25'	50'	75'	100'	125'	150'	175'	200'	225'	250'	275'	300'	325'
1/2 HP	0	9.2	8.7	8.2	7.8	7.3	6.8	6.3	5.8	5.3	4.8	4.3	3.7	2.5
	30	7.9	7.4	6.9	6.4	6.0	5.5	4.9	4.3	3.7	2.9			
	50	7.0	6.5	6.0	5.5	5.0	4.4	3.8	2.9	1.3				

	PSI	25'	50'	75'	100'	125'	150'	175'	200'	225'	250'	275'	300'	325'	350'	375'	400'	425'	450'	475'
3/4 HP	0	9.3	9.0	8.7	8.2	7.8	7.4	7.1	6.8	6.4	6.1	5.7	5.4	5.0	4.6	4.1	3.6	3.1	2.4	1.7
	30	8.4	7.9	7.5	7.1	6.8	6.5	6.2	5.8	5.6	5.1	4.7	4.2	3.8	3.2	2.5	1.8			
	50	7.7	7.3	6.9	6.5	6.2	5.9	5.5	5.2	4.8	4.3	3.8	3.3	2.7	1.9					

	PSI	25'	50'	75'	100'	125'	150'	175'	200'	225'	250'	275'	300'	325'	350'	375'	400'	425'	450'	475'
1 HP	0	9.4	9.1	8.8	8.5	8.3	7.9	7.7	7.3	7.0	6.7	6.4	6.1	5.8	5.5	5.1	4.8	4.4	4.0	3.7
	30	8.6	8.3	8.0	7.7	7.5	7.1	6.7	6.4	6.2	5.9	5.5	5.2	4.9	4.5	4.1	3.7	3.4	2.9	2.4
	50	8.1	7.8	7.4	7.1	6.8	6.5	6.2	5.9	5.6	5.3	4.9	4.5	4.2	3.8	3.4	2.9	2.4	2.2	

	PSI	50'	100'	150'	200'	250'	300'	350'	400'	450'	500'	550'	600'	650'	700'	750'
1½ HP	0	9.3	8.8	8.3	7.9	7.5	7.1	6.7	6.3	5.8	5.3	4.8	4.2	3.6	2.9	1.9
	30	8.6	8.2	7.8	7.3	6.9	6.5	6.0	5.6	5.1	4.6	4.0	3.3	2.6	1.4	
	50	8.2	7.8	7.3	7.0	6.6	6.1	5.7	5.2	4.6	4.0	3.3	2.6	1.8		

FRICTION LOSSES IN RISER PIPE HAVE NOT BEEN CALCULATED

NO-LEAD: The weighted average of the wetted surface of this no-lead product contacted by consumable water contains less than one quarter of one percent (0.25%) lead.

A.Y. McDonald Mfg. Co.
P.O. Box 508
Dubuque, IA 52004-0508

Toll Free: 1-800-292-2737
Fax: 1-800-832-9296
Hours: 7:00 a.m. - 5:00 p.m., CST

sales@aymcdonald.com
www.aymcdonald.com

A.Y. McDonald considers the information on this assembly drawing correct when published. Item and option availability, including specifications, are subject to change without notice.

Submitted by: