SUBMITTAL DATA SHEET

No-Lead Low Pressure Valves
Vacuum Breaker – 72001

F.G.H.T. X M.G.H.T.



A.Y. McDonald Mfg. Co. No-Lead Low Pressure Valves are constructed from heavy duty no-lead brass and are recommended for residential and commercial applications and positive shut-off with various inlet configurations.

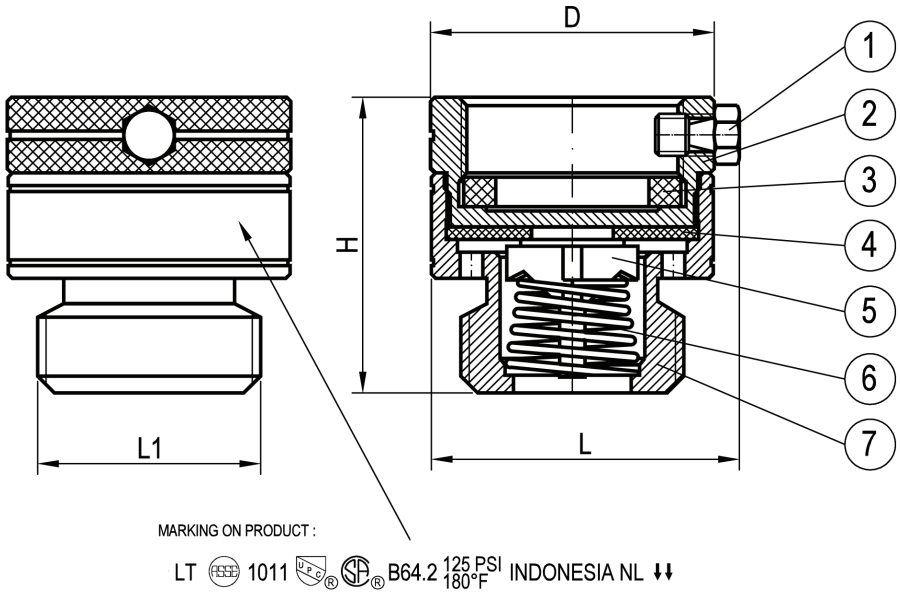

Dimensions

Size	H	L	L1	D
3/4”	1.38	1.44	1.04	1.33

Materials

No.	Part	Material
1	Bolt	No-Lead Brass
2	Bonnet	No-Lead Brass
3	Packing	
4	Seat Packing	
5	Spring House	Polyacetal
6	Spring	Stainless Steel
7	Body	No-Lead Brass

SUBMITTAL INFORMATION

- Sizes: 3/4”
- Flat washer seat

NO-LEAD: The weighted average of the wetted surface of this no-lead product contacted by consumable water contains less than one quarter of one percent (0.25%) lead.

A.Y. McDonald Mfg. Co.
P.O. Box 508
Dubuque, IA 52004-0508

Toll Free: 1-800-292-2737
Fax: 1-800-832-9296
Hours: 7:00 a.m. - 5:00 p.m., CST

sales@aymcdonald.com
www.aymcdonald.com

A.Y. McDonald considers the information on this assembly drawing correct when published. Item and option availability, including specifications, are subject to change without notice.

Submitted by: