SUBMITTAL DATA SHEET

NL Ball Style Meter Stop – 76107MW

MNPT x Meter

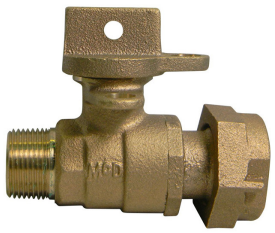

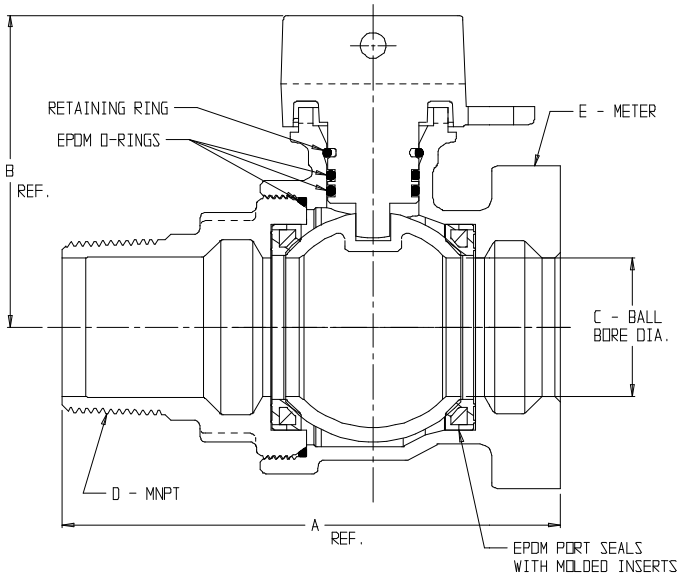

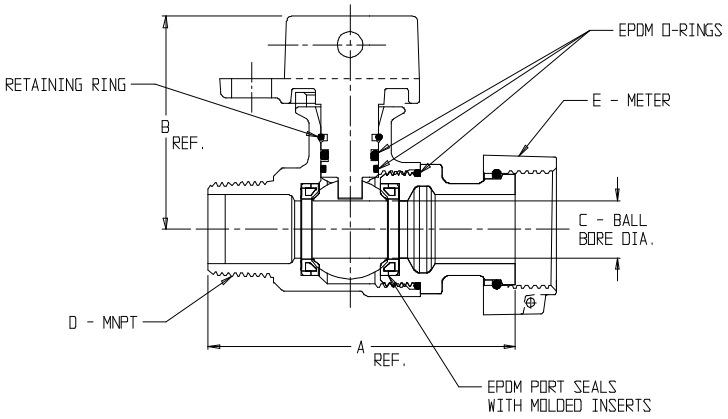

MODEL	SIZE	A	B	C	D	E
76107MW	1 1/2	5.40	3.39	1.50	1 1/2	1 1/2
76107MW	2	6.41	3.71	2.00	2	1 1/2 OR 2

MODEL	SIZE	A	B	C	D	E
76107MW	3/4 X 5/8 X 5/8	3.31	2.32	.63	3/4	5/8
76107MW	3/4 X 5/8 X 3/4	3.34	2.32	.63	3/4	5/8 X 3/4, 3/4
76107MW	3/4	3.91	2.42	.75	3/4	5/8 X 3/4, 3/4
76107MW	1	5.05	2.77	1.00	1	1

SUBMITTAL INFORMATION

- Manufactured in compliance with ANSI/AWWA C800 (latest revision)
- Brass components in contact with potable water conform to ASTM B584, UNS C89833 (latest revision) and identified with “NL”
- Certified to NSF/ANSI 61 and NSF/ANSI 372
- Brass components not in contact with potable water conform to ASTM B62 and ASTM B584, UNS C83600 -85-5-5-5 (latest revision)
- PTFE coated brass ball
- Rated for 300 PSIG water pressure
- Blow out proof EPDM port seals
- End piece joint sealed with an EPDM o-ring and thread locker

A.Y. McDonald Mfg. Co.
P.O. Box 508
Dubuque, IA 52004-508

Toll Free: 1-800-292-2737
Fax: 1-800-832-9296
Hours: 7:00 a.m. – 5:00 p.m., CST

sales@aymcdonald.com
www.aymcdonald.com

A.Y. McDonald considers the information on this assembly drawing correct when published. Item and option availability, including specifications, are subject to change without notice.

Submitted by: