SUBMITTAL DATA SHEET

Dewatering Pumps

Electric & DC Powered | Engine Driven

Fire Pump



The A.Y. McDonald Engine Driven line of High Pressure/Fire pumps deliver excellent pressure and flow for use in many applications including: fire protection, emergency fire fighting, washdown, and AG/Sprinkler. Portable units feature metal fuel tanks installed on engine or frame depending on model. 12 Volt DC electric start engine with recoil starter from Briggs & Stratton Vanguard, Honda Gasoline, or Yanmar Diesel engines are standard on these pumps.

Applications

For use with non-flammable liquids which are compatible with pump component materials.

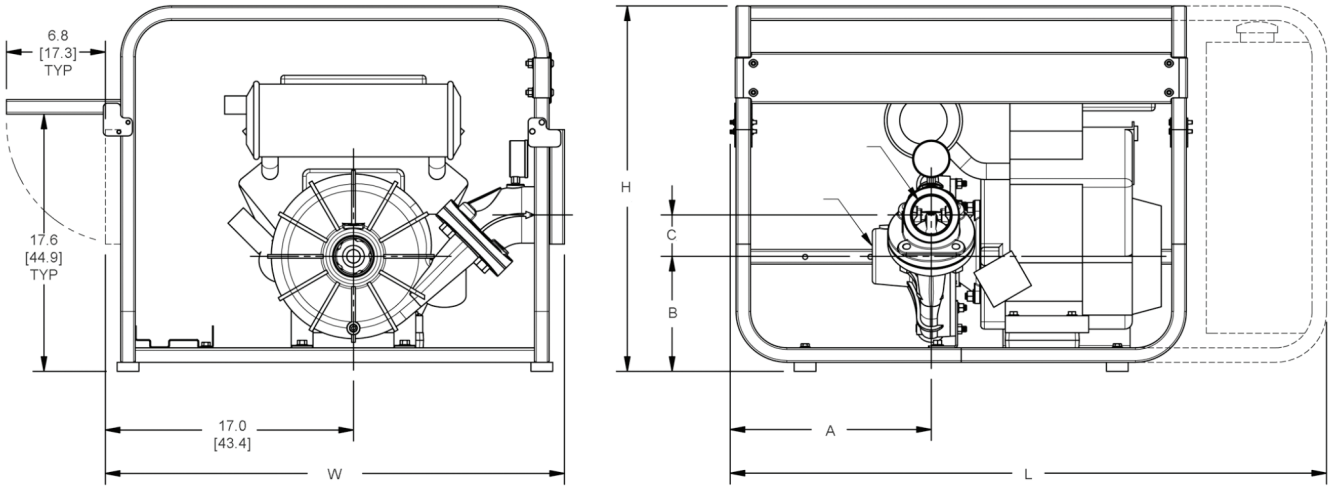

Dimensions

Model	HP Class♦	A	B	C	L**	W	H	Suct*	Disch*
02.5FP13HR	13	13.3	6.8	4.6	31.8	31.6	25.1	2 1/2	2 1/2
02.5FP13AR	13	13.3	6.8	4.6	31.8	31.6	25.1	2 1/2	2 1/2
02.5FP23AR†	23	13.8	7.9	2.8	41.0	31.6	25.1	2 1/2	2 1/2

(♦) HP Class represents market category and is not intended to define actual horsepower.

(*) Standard NPT (Male) pipe thread. | (**) This dimension may vary due to engine manufacturer's specifications.

NOTE: Dimensions are in inches (centimeters) and have a tolerance of ± 1/8".

(†) Minimal Assembly Required: Auxiliary Fuel Tank Shipped Uninstalled.

SUBMITTAL INFORMATION

- Aluminum construction with replaceable hard coat anodized wear ring
- Viton® mechanical seals with silicon carbide & carbon faces
- 2 1/2" NPT Suction & Discharge ports
- Primes assist to 19'
- Maximum temperature 200°F
- Exhaust prime or hand prime depending on model
- Built-in discharge check valve
- Discharge pressure gauge included
- Suction strainer, nipples and heavy duty steel roll frame with battery tray included
- Maximum head up to 165 PSI/380' TDH
- Delivers to 270 GPM
- Optional NPT to Fire Hose thread available
- Optional wheel kit available

NO-LEAD: The weighted average of the wetted surface of this no-lead product contacted by consumable water contains less than one quarter of one percent (0.25%) lead.

A.Y. McDonald Mfg. Co.
P.O. Box 508
Dubuque, IA 52004-0508

Toll Free: 1-800-292-2737
Fax: 1-800-832-9296
Hours: 7:00 a.m. - 5:00 p.m., CST

sales@aymcdonald.com
www.aymcdonald.com

A.Y. McDonald considers the information on this assembly drawing correct when published. Item and option availability, including specifications, are subject to change without notice.

Submitted by:

SUBMITTAL DATA SHEET

Dewatering Pumps

Electric & DC Powered | Engine Driven

Fire Pump



The A.Y. McDonald Engine Driven line of High Pressure/Fire pumps deliver excellent pressure and flow for use in many applications including: fire protection, emergency fire fighting, washdown, and AG/Sprinkler. Portable units feature metal fuel tanks installed on engine or frame depending on model. 12 Volt DC electric start engine with recoil starter from Briggs & Stratton Vanguard, Honda Gasoline, or Yanmar Diesel engines are standard on these pumps.

Applications

For use with non-flammable liquids which are compatible with pump component materials.

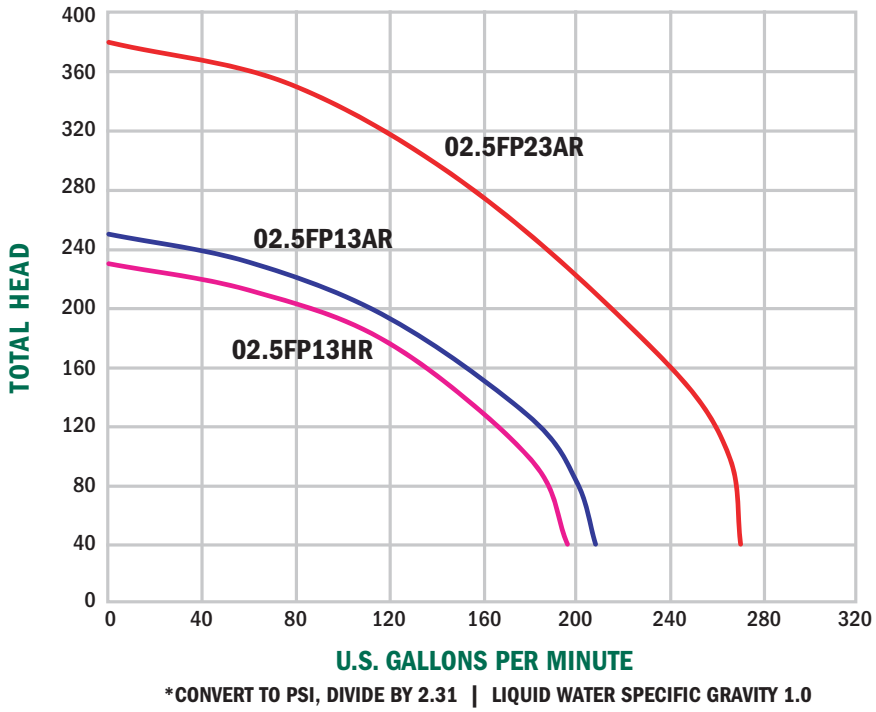

*CONVERT TO PSI, DIVIDE BY 2.31 | LIQUID WATER SPECIFIC GRAVITY 1.0

Pump Dimensional & Specification Data

Model No.	Curve	Driver	Seal Type & Elastomer/Faces	Prime Feature	Tank Size (Gal/Ltr)	Run Time (Hr.)	Ship Wt. (Lbs.)
02.5FP13HR	A	Honda GX390▲++	Viton® Silicon Carbide/Carbon	Hand	1.6/6.1	2.5	200
02.5FP13AR	B	B&S Vanguard 13 HP▲++	Viton® Silicon Carbide/Carbon	Exhaust	2.25/8.5	1.8	225
02.5FP23AR	C	B&S Vanguard 23 HP▲++	Viton® Silicon Carbide/Carbon	Exhaust	10/37.8	7.0	255

*Viton® is a registered trademarks of DuPont.

Construction: Aluminum

▲ Oil Alert Included

++ Electric Start

NO-LEAD: The weighted average of the wetted surface of this no-lead product contacted by consumable water contains less than one quarter of one percent (0.25%) lead.

EST. 1856 McDonald

A.Y. McDonald Mfg. Co.
P.O. Box 508
Dubuque, IA 52004-0508

Toll Free: 1-800-292-2737
Fax: 1-800-832-9296
Hours: 7:00 a.m. - 5:00 p.m., CST

sales@aymcdonald.com
www.aymcdonald.com

A.Y. McDonald considers the information on this assembly drawing correct when published. Item and option availability, including specifications, are subject to change without notice.

Submitted by: