SUBMITTAL DATA SHEET

NL Ball Style Curb Stop – 74646B-22

-22 CTS Compression x FNPT

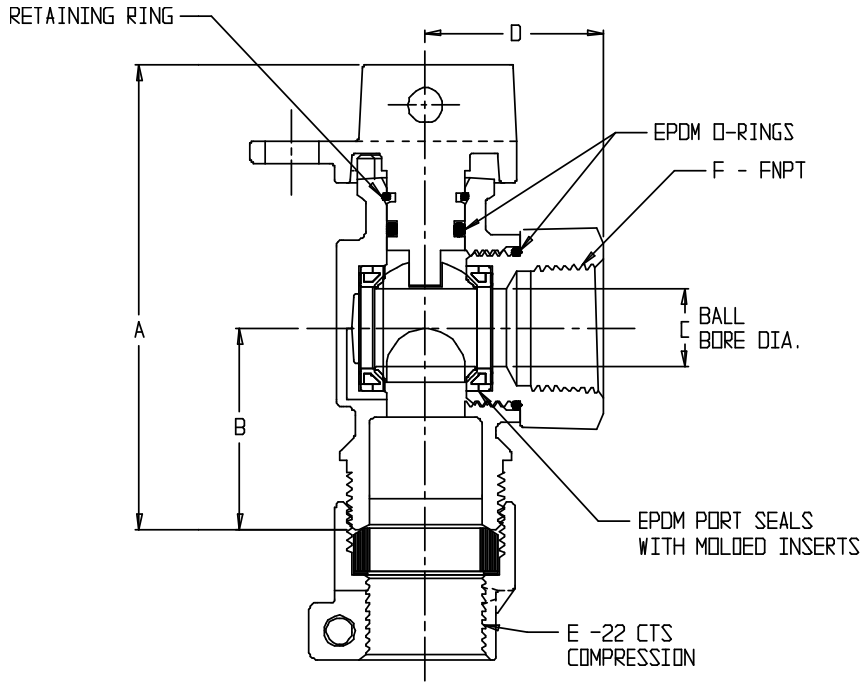

MODEL	SIZE	A	B	C	D	E	F
74646B-22	3/4	3.74	1.62	.63	1.44	3/4	3/4
74646B-22	1 X 3/4	3.72	1.60	.63	1.44	1	3/4
74646B-22	1	4.64	2.21	.75	1.68	1	1

SUBMITTAL INFORMATION

- Manufactured in compliance with ANSI/AWWA C800 (latest revision)
- Brass components in contact with potable water conform to ASTM B584, UNS C89833 (latest revision) and identified with "NL"
- Certified to NSF/ANSI 61 and NSF/ANSI 372
- Brass components not in contact with potable water conform to ASTM B62 and ASTM B584, UNS C83600 -85-5-5-5 (latest revision)
- PTFE coated brass ball
- Rated for 300 PSIG water pressure
- Blow out proof EPDM port seals
- End piece joint sealed with an EPDM o-ring and thread locker
- Insert stiffeners required on all flexible plastic connections

A.Y. McDonald Mfg. Co.
P.O. Box 508
Dubuque, IA 52004-508

Toll Free: 1-800-292-2737
Fax: 1-800-832-9296
Hours: 7:00 a.m. – 5:00 p.m., CST

sales@aymcdonald.com
www.aymcdonald.com

A.Y. McDonald considers the information on this assembly drawing correct when published. Item and option availability, including specifications, are subject to change without notice.

Submitted by: