A.Y. McDonald
4” & 6” Submersible Motors
IOM Manual



January 2019

Section	Page
Overview	4
Safety	4
Applications	4
Liquids in which the motor can operate	5
Compatible Pumps	5
Motor Powered by a Frequency Converter	5-6
Installation	6
Electrical Connections to the Electric Motor	7
Maintenance, Service	7
Spare Parts	8
Storage	8
Frequency of Starts	8
Mounting Position	9
Water Temperature & Flow	10
Flow Inducer Sleeve	10
Hot Water Application	11
Control Box Mounting	11
4” Two-Wire Motor Dimensions	12
4” Three-Wire Motor Dimensions	13
6” Motor Dimensions	14
Single Phase - Motor Data	15
Three Phase - Motor Data	16
Motor Winding Resistance	17
Maximum Cable Lengths in Ft.	18
Tightening Motor Lead Connector Screws	19
Shaft Height	19
Control Box Small Dimensions Type CSIR	19
Control Box Large Dimensions Type CSCR	20
Control Box - Wiring Diagrams – CSIR Series	21
Control Box - Wiring Diagrams – CSCR Series	22-25
Three Phase Power Unbalance	26-27
Transformer Sizes	28
Power Supply by Generator	28
Insulation Testing	29
Resistance of the Drop Cable	29
Bolt Torque Settings	30
Motor Warranty Form	31

Table	Section	Page
Table 1	Power supply voltage tolerances	7
Table 2	Maximum number of starts per day	8
Table 3	Minimum GPM required for motor cooling in water up to 95°F (35°C)	10
Table 4	Minimum GPM required for motor cooling in water above 95°F (35°C)	11
Table 5	4” Two-Wire Motor Dimensions	12
Table 6	4” Three-Wire Motor Dimensions	13
Table 7	6” Three-Wire Motor Dimensions	14
Table 8	4” Two-Wire - Single Phase - Motor Data	15
Table 9	4” Three-Wire - Single Phase - Motor Data	15
Table 10	6” Three-Wire - Single Phase - Motor Data	15
Table 11	4” Three-Wire - Three Phase - Motor Data	16
Table 12	6” Three-Wire - Three Phase - Motor Data	16
Table 13	4” Two-Wire - Single Phase motor winding resistance	17
Table 14	4” Three-Wire - Single Phase motor winding resistance	17
Table 15	6” Three-Wire - Single Phase motor winding resistance	17
Table 16	4” Three-Wire - Three Phase motor winding resistance	17
Table 17	6” Three-Wire - Three Phase motor winding resistance	17
Table 18	Cable sizing	18
Table 19	Motor Shaft heights	19
Table 20	Transformer sizing	28
Table 21	Generator sizing	28
Table 22	Drop cable resistance	29
Table 23	Bolt Torque settings	30

OVERVIEW

Please read this documentation carefully before installation.
This manual gives important information concerning the installation, use and maintenance of the motors.
The contents of this manual refer to the standard product, as presented in the sales documentation.
The installation and operation must comply with the safety regulations in the country in which the product is installed.
The entire operation must be carried out in a professional manner.
Failure to comply with the safety regulations not only causes risk to personal safety, it can also damage the equipment and it will void the warranty.

SAFETY

Below are the warning symbols used in this manual to warn of perticular dangers



ELECTRIC SHOCK DANGER
The non observance of the prescription involves electric shock risk.



DANGER
The non observance of the prescription involves the risk of damages to persons and / or equipment.



MECHNICAL DANGER
The non observance of the prescription involves the risk of technical damages to the motor and / or installation.

APPLICATIONS

C US
190906

All the motors in the SM04 & SM06 ranges can be used to drive submersible pumps in the conditions established in
CSA Standard C22.2 No. 100-14 (Motors and Generators)
UL Standard 1004-1 (Electric Motors),
and at the supply voltage / frequency specified on the rating plate.

The shaft extension and flange size of these motors comply with NEMA MG1:2016.
The power of the pumps coupled to these motors must be less than or equal to that of the motors.

LIQUIDS IN WHICH THE MOTOR CAN OPERATE

This motor can be used in cold water.



Do not use this motor with corrosive or explosive liquids



Do not use this motor with particularly dirty or hard water
(impurities may deposit on the outer casing.

COMPATIBLE PUMPS

Make sure the motor is compatible with the pump. Incompatible combinations may cause problems.
In particular, before coupling the motor to the pump check that:

- The power of the motor is greater than or equal to the power absorbed by the pump end.
- The rpm of the pump matches the rotational frequencey of the motor.
- The pump has a NEMA motor connection and that the shaft turns freely.

MOTOR POWERED BY A FREQUENCY DRIVE

Variable Frequencey Drive's VFD's are used to change the rotational speed of the motor so that the out-put of the attached pump adjusts to the users demand for water.

VFD's also reduce the starting current and "water hammer" during starting.
AY McDonald's three-phase, encapsulated submersible motors can be used with variable frequency drives (VFD) when used within the guidelines listed here.

All three-phase, encapsulated submersible motors must have the VFD sized based on the motor's nameplate maximum amps, NOT horsepower. The continuous rated amps of the VFD must be equal to or greater than the motor's nameplate maximum amps or warranty will be void.

The VFD must have one RLC output filter to limit the voltage peaks and/or to reduce the dV/dt of the pulses generated by the inverter. The application of the filter will help to reduce the stress on the motor insulation (thermal and electrical). The filter can be installed at the inverter output to reduce the dV/dt value or at the motor terminals to attenuate the voltage peaks amplitude.

The motor must reach or pass the 30 Hz operating speed within 1 second of the motor being energized.
If this does not occur, the motor bearings will be damaged and the motor life will be reduced.

MOTOR POWERED BY A FREQUENCY DRIVE *continued*

A.Y. McDonald suggests these MAX values for three phase encapsulated submersible motors
Max. Vpeak voltage: 1000 V phase-phase
Max. dV/dt :2000 V/µs

Filters are usually applied when the power cable to the motor is longer than 50ft (15.2m)
A.Y. McDonald suggests the use of an input filter when the VFD is used in a residential area, to protect other devices connected to the same mains from noise caused by the VFD
Frequency range: 30 Hz – 60 Hz

Drive carrier frequency: The range must be from 4.5k to 5k Hz .
Higher values will increase the quantity of Voltage Spikes per second and reduce motor insulation lifetime.
Lower values give a poor shape to the power curve.
Ramp-up time / Ramp down time: | df/dt | > 30 Hz/sec (where f indicates the frequency) to ensure the life of the thrust bearings

The motor's operating speed must always operate so the minimum cooling flows are reached.
0.98 ft/sec for 6-inch motors
0.98 ft/sec for 4-inch motors

Motor overload protection must trip within a time equal to, or faster than, the time indicated by Class 10 overload curve and must trip within 115% of the nameplate Max. Amp.
In the SM06 6" motor it is possible to monitor the temperature of the motor with a Pt100 or PTC sensor (6" motor only).

A.Y. McDonald's encapsulated submersible motors are not declared inverter duty motors by NEMA MG1 standards. The reason is NEMA MG1 standard part 31 does not include a section covering encapsulated winding designs.

A.Y. McDonald's submersible motors can be used with VFDs without problems or warranty concerns providing all A.Y. McDonald's guidelines are followed.

INSTALLATION

Before installing the motor, read both the motor and pump instruction manuals. Keep both manuals in a safe place.

If the product shows any signs of damage, do not proceed with installation and call your local distributor.
You must use suitable equipment and protective devices. Observe all accident prevention regulations.
Installations must always be in accordance with current local and/or national regulations, legislation and bylaws governing installation of water and power equipment.
A.Y. McDonald submersible motors are designed to be used in a shaft up vertical position.

During acceleration, the pump thrust increases as its output head increases. In cases where the pump head stays below its normal operating range during startup and full speed condition, the pump may create upward thrust. This creates upward thrust on the motor upthrust bearing. This is an acceptable operation for short periods at each start, but running continuously with upthrust will cause excessive wear on the upthrust bearing.

ELECTRICAL CONNECTIONS TO THE ELECTRIC MOTOR

Electrical connections may only be performed by a qualified installer in compliance with current regulations.
Make sure that the supply voltage and frequency are compatible with the electrical panel.
The relative information is shown on the motor rating plate and in the documents supplied with the panel.
Provide suitable short circuit protection on the supply line.
Before proceeding, make sure that all the connections (even if they are potential-free) are voltage-free.

Unless otherwise specified in local bylaws, the supply line must be fitted with:

- a short circuit protection device.
- a high sensitivity ground-fault circuit interrupter (GFCI) residual current circuit breaker (30mA) for additional protection from electrocution in case of inefficient grounding.
- a general switch with a contact aperture of at least 3 millimetres.

Ground the system in compliance with current regulations

Table 1: Power supply voltage tolerances:

Frequency in Hz	Phase	Voltage	Tolerance%
60	1	115V	-10% +6%
60	1	230V	-10% +6%
60	3	460V	-10% +6%
60	3	575V	-10% +6%

Single-phase version

- Connect the electric motor to a supply line via a suitable electrical control panel containing the overload protection and the capacitor.
- Refer to the wiring diagram on pages 23-25 and the documentation supplied with the electrical panel.
- Refer to the motor rating plate for the capacity of the capacitor.
- Install the electrical panel in a sheltered area.

Three-phase version

- Connect the electric motor to a supply line via a suitable electrical control panel .
- Install the electrical panel in a sheltered area.
- Refer to the documentation supplied with the electrical panel.
- For connections to any external control devices (ie.: pressure switch, float) follow the instructions supplied with these devices.

MAINTENANCE, SERVICE

- Before proceeding, always make sure the motor is disconnected from the supply line.
- Maintenance operations may only be performed by expert and qualified people.
- Use suitable equipment and protective devices. Observe all accident prevention regulations.
- Do not attempt to disconnect the connector from the motor head cable.
- This may only be done by authorized personnel.
- The motor does not require any scheduled routine maintenance.
- Users wishing to prepare a maintenance schedule should bear in mind that maintenance frequencies depend on the conditions of use.
- For any requirements, please contact our Sales and Service Department.

SPARE PARTS

Always specify the exact type of motor and code when requesting our Sales and Customer Service for technical information or spare parts.
Only use original spare parts to replace faulty components. Unsuitable spare parts may cause the product to work incorrectly and cause hazards for people and property.

STORAGE

A.Y. McDonald's submersible motors are a water-lubricated design.
The fill solution consists of a mixture of deionized water and Propylene Glycol (a non-toxic antifreeze).
The solution will prevent damage from freezing in temperatures to -23°F (-5°C); motors should be stored in areas that do not go below this temperature.

There may be an interchange of fill solution with well water during operation. Care must be taken with motors removed from wells during freezing conditions to prevent damage.

When the storage temperature does not exceed 104°F (40°C), storage time should be limited to two years. Where temperatures reach 100° to 130°F, storage time should be limited to one year.

Loss of a few drops of liquid will not damage the motor as an excess amount is provided, and the filter check valve will allow lost liquid to be replaced by filtered well water upon installation. If there is reason to believe there has been a considerable amount of leakage, contact A.Y. McDonald for checking procedures.

A.Y. McDonald recommend that you leave the motor in its original packaging until the day of installation.
When standing the motor upright make sure that it cannot fall over (shaft always upwards).
Do not subject the motor to direct sunlight or other heat sources.
If the SM06 motor is older than one year (in case of reuse or after long storage) the motor fluid level must be checked before installation.

FREQUENCY OF STARTS

The average number of starts per day over a period of months or years influences the life of a submersible pumping system. Excessive cycling affects the life of control components such as pressure switches, starters, relays and capacitors. Rapid cycling can also cause motor spline damage, bearing damage, and motor overheating.
All these conditions can lead to reduced motor life.

The pump size, tank size and other controls should be selected to keep the starts per day as low as practical for longest life.

4 Inch motors should run a minimum of two minutes in order to dissipate heat built up from starting.
6 Inch motors should run a minimum of three minutes in order to dissipate heat built up from starting.
6 inch motors should have a minimum of 10 minutes between starts or starting attempts

Table 2: Maximum # starts per day

Motor Rating		Maximum # starts per day	
HP	KW	Single-Phase	Three-Phase
1/2 - 1	0.37 - 0.75	300	300
1 1/2 - 5	1.1 - 3.7	100	300
7 1/2 - 15	5.5 - 11	50	200
20 - 30	15 - 22	-	200
40 and above	30 and above	-	100

MOUNTING POSITION

A.Y. McDonald's submersible motors are designed primarily for operation in the vertical, shaft-up position.

During acceleration, the pump thrust increases as its output head increases. In cases where the pump head stays below its normal operating range during startup and full speed condition, the pump may create upward thrust. This creates upward thrust on the motor upthrust bearing. This is an acceptable operation for short periods at each start, but running continuously with upthrust may cause excessive wear on the upthrust bearing

With certain restrictions, motors are also suitable for operations in positions from shaft-up to shaft-horizontal. As the mounting position becomes further from vertical and closer to horizontal, the probability of shortened thrust bearing life increases. For normal thrust bearing life expectancy with motor positions other than shaft-up, follow these recommendations:

1. All the motors in the range can be installed horizontally as long as the axial thrust of the pump never falls below 22.48lbs (100 N) while it is working.
2. Do not use in systems which can run even for short periods, at full speed without thrust toward the motor
3. Minimize the frequency of starts, Six inch motors should have a minimum of 20 minutes between starts or starting attempts

For normal motor life expectancy with the submersible motors we advise to keep the shaft a minimum of 30° from horizontal.

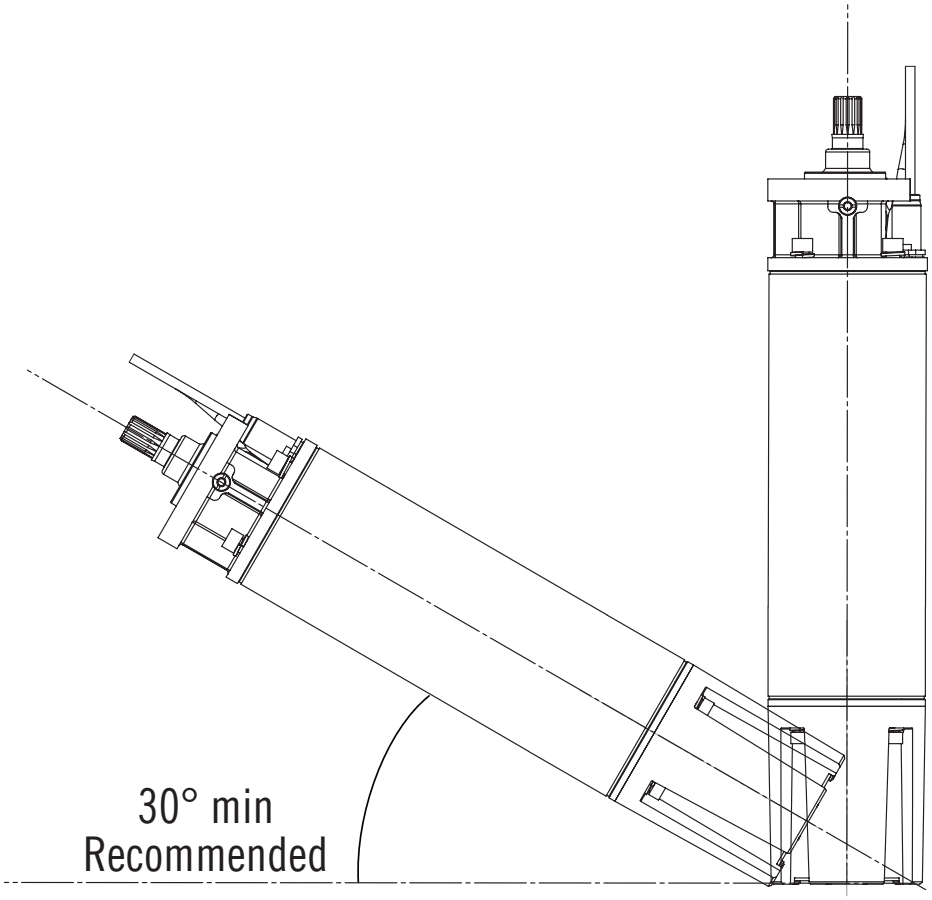

WATER TEMPERATURE & FLOW

A.Y. McDonald's standard submersible motors are designed to operate up to maximum service factor in water up to 95°F (35°C).

A minimum flow of 0.98 ft/sec for 4"& 6" motors is required for proper cooling.

Table 3: Minimum GPM required for motor cooling in water up to 95ºF (35ºC)

Minimum GPM required for motor cooling in water up to 95ºF (35ºC)		
Casing or Sleeve I.D. Inches	4" Motor (1/2 - 10 HP)	6" Motor
	0.98 ft/sec (0.3m/sec)	0.98 ft/sec (0.3m/sec)
	GPM (l/min)	GPM (l/min)
4"	5	
5"	28	
6"	55	18
7"	86	50
8"	122	90
10"	209	180
12"	315	280
14"	440	400
16"	585	560

The table shows minimum flow rates, in GPM, for various well diameters and motor sizes

FLOW INDUCER SLEEVE

If the flow rate is less than specified or coming from above the pump, then a flow inducer sleeve must be used. A flow sleeve is always required in an open body of water.

Figure shows a typical flow inducer sleeve construction.

Example : A four-inch motor and pump that delivers 60 GPM will be installed in a 8" well. From Table 3

A 122 GPM flow would be required to maintain proper cooling in an 8" casing, as the 6" casing requires a min flow of 55 GPM then adding an 6" or smaller flow sleeve provides the required cooling.

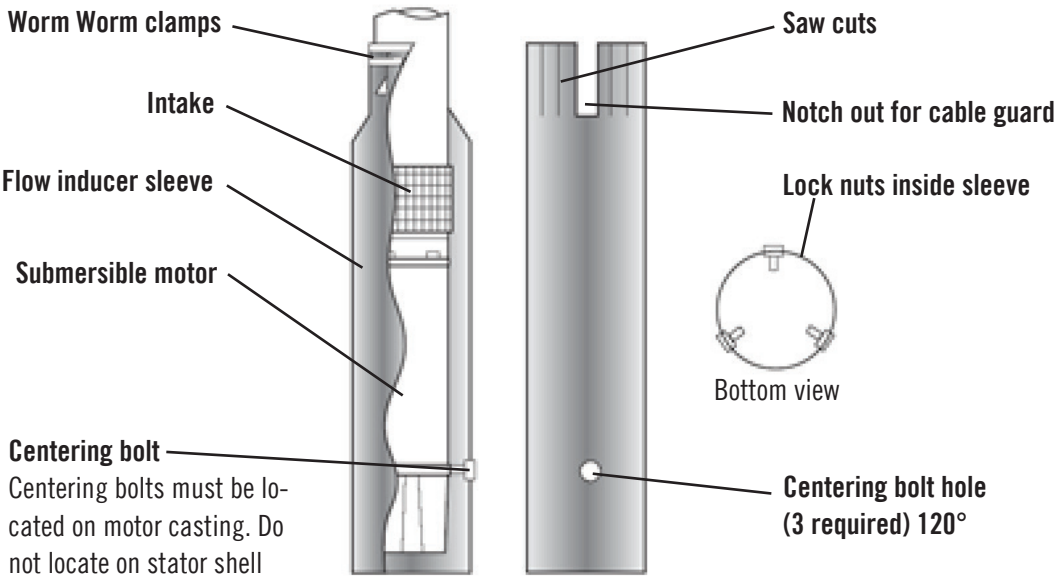

800.292.2737 | sales@aymcdonald.com | aymcdonald.com

HOT WATER APPLICATION

When the pump-motor operates in water hotter than 95°F (35°C), a flow rate of at least 11.5 ft/sec is required. When selecting the motor to drive a pump in over 95°F (35°C) water, the motor horsepower must be de-rated per the following procedure.

Using next Table to determine pump GPM required for different well or sleeve diameters.
If necessary, add a flow sleeve to obtain at least 11.5 ft/sec flow rate.

Table 4: Minimum GPM required for motor cooling in water greater than 95ºF (35ºC)

Minimum GPM required for motor cooling in water up to 95ºF (35ºC)		
Casing or Sleeve I.D. Inches	4” Motor (1/2 - 10 HP)	6” Motor
	11.5 ft/sec (3.2m/sec)	11.5 ft/sec (3.2m/sec)
	GPM (l/min)	GPM (l/min)
4”	75	
5”	330	
6”	650	104
7”	86	300
8”	122	1040

CONTROL BOX MOUNTING

Single phase submersible control boxes feature NEMA 3R enclosures for indoor or outdoor mounting. They should be mounted in a vertical position as relay manufacturers recommend correct relay positioning for proper, trouble-free operation.

Control boxes should be shaded from direct sunlight in areas where temperatures exceed 95°F (35°C) as excessive heat may dry out capacitors and shorten their life. It is advisable to paint the enclosure white if outside in very hot, sunny climates.

4” TWO-WIRE MOTOR DIMENSIONS

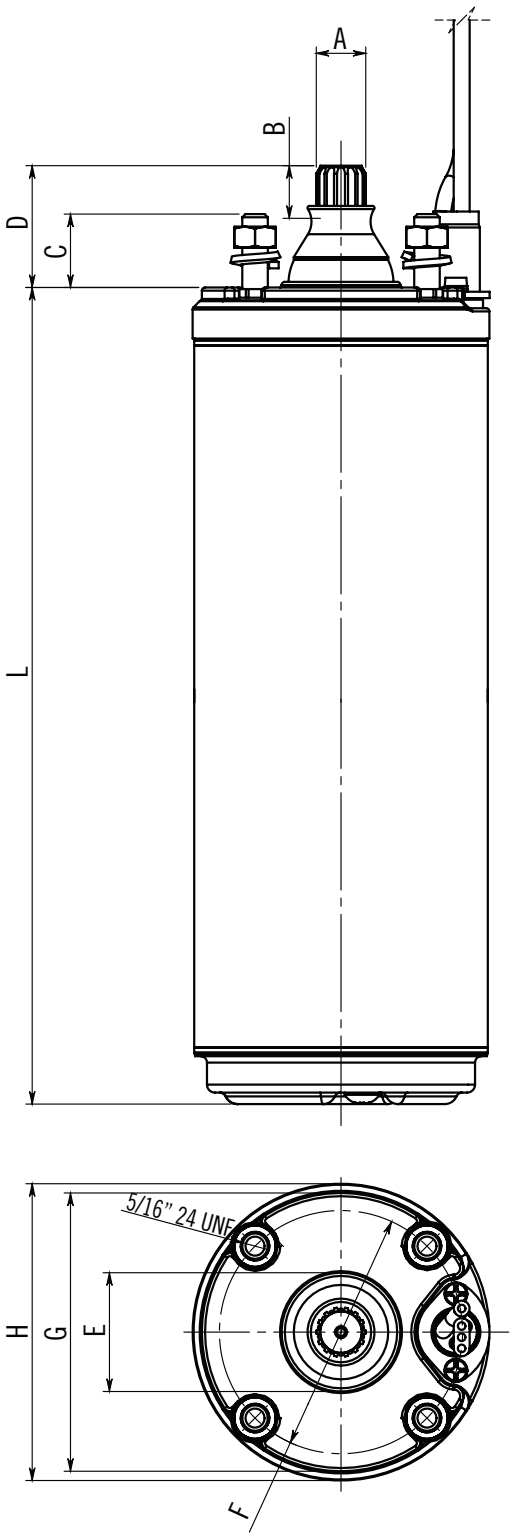

Table 5: 4” TWO-WIRE MOTORS

Single Phase Motor

4” DIMENSION					
Type			L	Wt.	Axial Thrust
	[HP]	[kW]	[inch]	[lbs]	[lbf]
60 Hz	1/2 / 115V	0.37	13.425	21.4	500
	1/2 / 230V	0.37	13.031	21.0	500
	3/4	0.55	13.819	23.2	500
	1	0.75	16.772	28.9	700
	1 1/2	1.1	18.543	33.3	700

4” DIMENSION			
Pos.	inch	Pos.	inch
A	$0.61”^{+0.002}_{-0.003}$	E	$1.465”^{+0.016}_{-0.016}$
B	$0.591”^{+0.02}_{-0}$	F	$3”^{+0.004}_{-0}$
C	$0906”^{+0.005}_{-0.005}$	G	$3.437”^{+0}_{-0.004}$
D	$1\ 1/2”^{+0.02}_{-0.02}$	H	$3.662”^{+0.004}_{-0.004}$

- CSA Certified



4” THREE-WIRE MOTOR DIMENSIONS

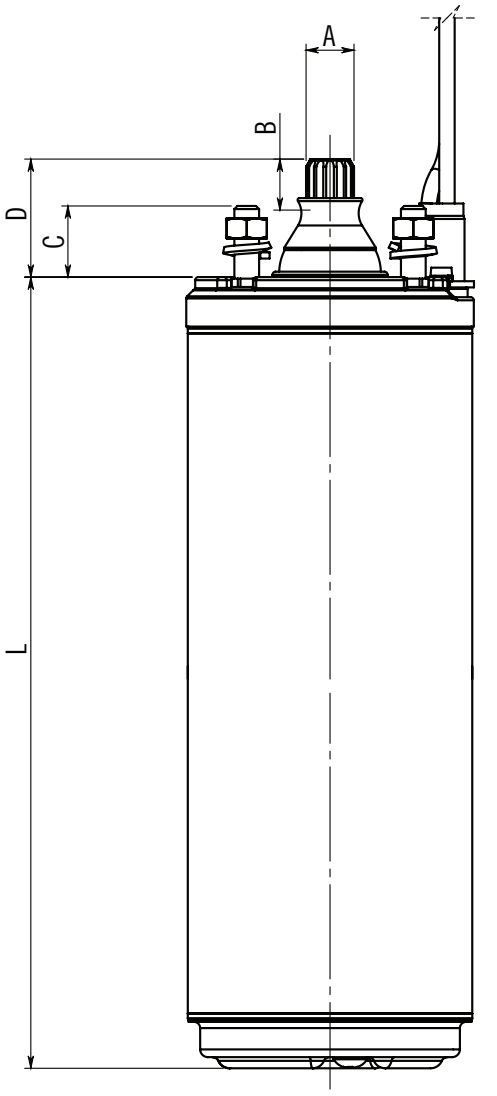

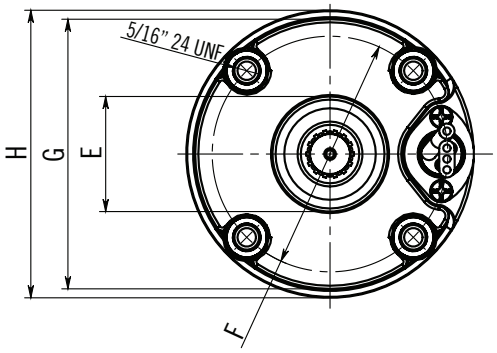

Table 6: 4” THREE-WIRE MOTORS

Single Phase Motor

4” DIMENSION					
Type			L	WT	Axial Thrust
	[HP]	[kW]	[inch]	[lbs]	[lbf]
60 Hz 3W	1/2	0.37	10.472	19.4	500
	3/4	0.55	11.260	21.4	500
	1	0.75	13.622	27.8	700
	1 1/2	1.1	16.181	32.5	700
	2	1.5	16.181	32.7	700
	3	2.2	21.417	45.2	1500
	5	3.7	26.929	59.8	1500

Three Phase Motor

4” DIMENSION					
Type			L	Wt.	Axial Thrust
	[HP]	[kW]	[inch]	[lbs]	[lbf]
60 Hz	1/2	0.37	9.291	16.3	500
	3/4	0.55	10.472	19.4	500
	1	0.75	11.260	21.4	500
	1 1/2	1.1	13.622	25.8	700
	2	1.5	15.394	30.5	700
	3	2.2	19.843	40.8	1500
	5	4	24.173	51.9	1500
	7 1/2	5.5	26.929	59.8	1500
	10	7.5	30.079	68.7	1500

4” DIMENSION			
Pos.	inch	Pos.	inch
A	$0.61”^{+0.002}_{-0.003}$	E	$1.465”^{+0.016}_{-0.016}$
B	$0.591”^{+0.02}_{-0}$	F	$3”^{+0.004}_{-0}$
C	$0906”^{+0.005}_{-0.005}$	G	$3.437”^{+0}_{-0.004}$
D	$1\ 1/2”^{+0.02}_{-0.02}$	H	$3.662”^{+0.004}_{-0.004}$

- CSA Certified



6” MOTOR DIMENSIONS

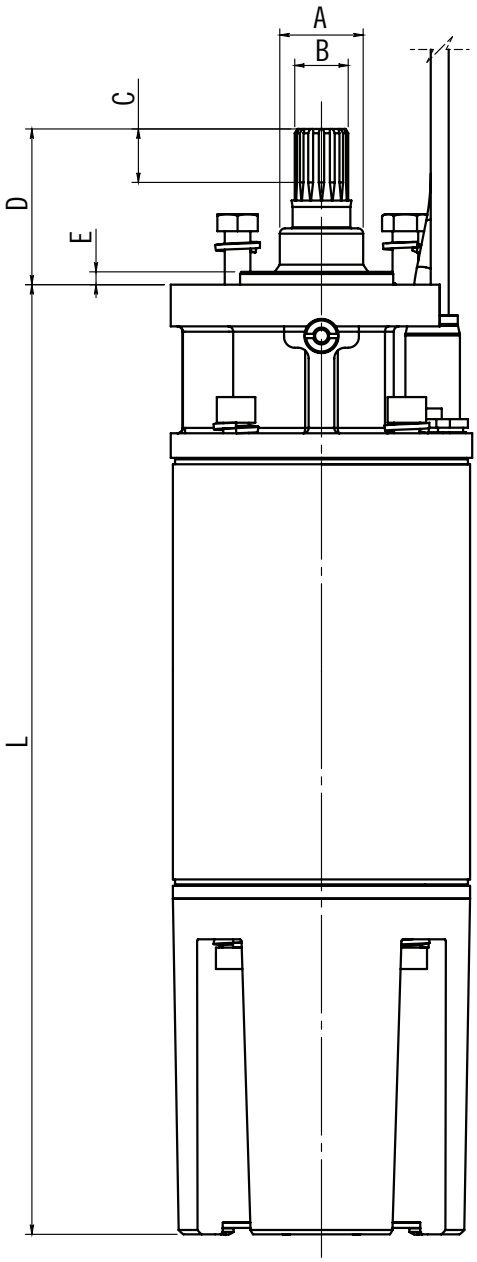

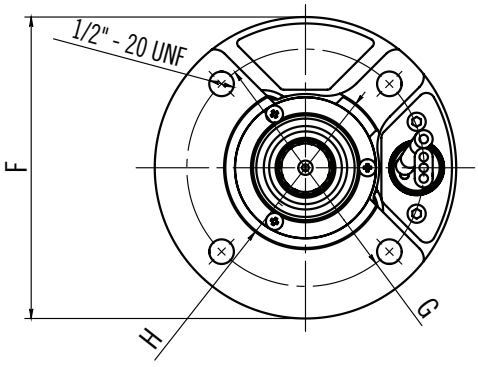

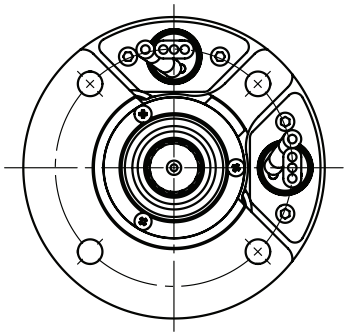

Table 7: 6” THREE-WIRE MOTORS

Single Phase Motor

6” DIMENSION					
Type			L	Wt.	Axial Thrust
	[HP]	[kW]	[inch]	[lbs]	[lbf]
60 Hz	7 1/2	5.5	28.740	154.5	3600
	10	7.5	30.944	168	3600
	15	11	33.897	185.2	3600

Three Phase Motor

6” DIMENSION					
Type			L	Wt.	Axial Thrust
	[HP]	[kW]	[inch]	[lbs]	[lbf]
60 Hz	5	4	23.661	123.3	3600
	7 1/2	5.5	24.843	130.7	3600
	10	7.5	26.023	137.4	3600
	15	11	28.779	162.1	3600
	20	15	30.944	174.8	3600
	25	18.5	33.897	192.1	3600
	30	22	36.258	205.3	3600
	40	30	41.377	236.6	6000
	50	37	46.496	274.5	6000
	60	45	53.582	311.5	6000

6” DIMENSION			
Pos.	inch	Pos.	inch
A	1.535	E	0.236
B	0.984	F	5.551
C	0.984	G	4.370
D	2.867	H	3.000

800.292.2737 | sales@aymcdonald.com | aymcdonald.com

SINGLE PHASE - MOTOR DATA

Table 8: 4" TWO-WIRE MOTOR DATA / ELECTRICAL DATA

Single Phase Motor

P2		V	SF	In	In (SF)	Is/In	Cs/Cn	P1	N	Cos φ	η	C	Ø	LC
[HP]	[kW]	[V]		[A]	[A]			[W]	[min^{-1}]		%	[uF]	[AWG]	[ft]
1/2	0.37	115	1.6	8.6	10	4.2	0.65	800	3450	0.88	46	80	3x14	5 1/2
		230	1.6	3.9	5	4.6	0.65	800	3450	0.88	46	20	3x14	5 1/2
3/4	0.55	230	1.5	6.3	6.9	4.3	0.65	1200	3450	0.82	47	25	3x14	5 1/2
1	0.75	230	1.4	7.7	8.8	4.8	0.68	1500	3450	0.84	50	35	3x14	5 1/2
1 1/2	1.1	230	1.3	11.8	12.7	4.7	0.70	2120	3450	0.85	53	40	3x14	5 1/2

Table 9: 4" THREE-WIRE MOTOR DATA / ELECTRICAL DATA

Single Phase Motor

P2		V	SF	In	In (SF)	Is/In	Cs/Cn	P1	N	Cos φ	η	C1	C2	Ø	LC
[HP]	[kW]	[V]		[A]	[A]			[W]	[min^{-1}]		%	[uF]	[uF]	[AWG]	[ft]
1/2	0.37	115	1.6	10	12.6	4.2	0.65	1050	3450	0.80	56	-	250-300	4x14	5 1/2
		230	1.6	5.5	6.6	4.6	0.65	1130	3450	0.78	54	-	59-71	4x14	5 1/2
3/4	0.55	230	1.5	7.4	8.6	4.0	0.65	1420	3450	0.80	56	-	86-103	4x14	5 1/2
1	0.75	230	1.4	8.3	9.8	4.9	0.68	1650	3450	0.80	62	-	105-126	4x14	5 1/2
1 1/2	1.1	230	1.3	10.1	11.5	4.6	0.70	2100	3450	0.88	67	10	105-126	4x14	5 1/2
2	1.5	230	1.25	10.6	13.0	5.4	0.65	2700	3450	0.95	70	20	105-126	4x14	5 1/2
3	2.2	230	1.15	14.3	16.2	3.6	0.50	3500	3450	0.94	71	45	208-250	4x14	5 1/2
5	3.7	230	1.15	22.2	24.3	3.3	0.50	5700	3450	0.98	76	2x40	270-324	4x14	8 3/4

Table 10: 6" THREE-WIRE MOTOR DATA / ELECTRICAL DATA

Single Phase Motor

P2		V	SF	In	In (SF)	Is/In	P1	N	Cos φ	η	C [uF]		Ø	LC
[HP]	[kW]	[V]		[A]	[A]		[W]	[min^{-1}]		%	Start	Run	[AWG]	[ft]
7 1/2	5.5	230	1.15	33.6	37.0	5.0	7400	3480	0.72	74	324-389	138	4x11	13
10	7.5	230	1.15	43.2	48.8	4.8	9900	3465	0.76	77	324-389	138	4x11	13
15	11	230	1.15	62.9	72.3	4.4	13400	3495	0.77	76	324-389	160	4x9	13

P2: Rated output
In: Rated current
Cs/Cn: Locked rotor Torque/Rated Torque
Cos φ: Power factor
Ø: Cable section

V: Rated voltage
In (SF): Service factor currect
P1: Power consumption
η: Efficiency
LC: Cable length

SF: Service factor
Is/In: Locked rotor current/Rated current
N: R.P.M
C: Capacitor

THREE PHASE - MOTOR DATA

Table 11: 4" THREE-WIRE MOTOR DATA / ELECTRICAL DATA

Three Phase Motor

P2		V	SF	In	In (SF)	Is/In	Cs/Cn	P1	N	Cos φ	η	C	ø	LC
[HP]	[kW]	[V]		[A]	[A]			[W]	[min^{-1}]		%	[uF]	[AWG]	[ft]
1/2	0.37	230	1.6	3.2	3.8	4.4	3.2	870	3450	0.40	42	-	4x14	5 1/2
		460	1.6	1.6	1.9	5.0	3.2	870	3450	0.40	42	-	4x14	5 1/2
3/4	0.55	230	1.5	4.4	4.8	5.2	3.6	1140	3450	0.47	48	-	4x14	5 1/2
		460	1.5	2.2	2.4	5.5	3.6	1140	3450	0.47	48	-	4x14	5 1/2
1	0.75	230	1.4	5.2	5.6	6.4	4.2	1260	3450	0.59	59	-	4x14	5 1/2
		460	1.4	2.6	2.8	5.8	4.2	1260	3450	0.59	59	-	4x14	5 1/2
1 1/2	1.1	230	1.3	7.2	7.8	5.9	4.1	1875	3450	0.53	60	-	4x14	5 1/2
		460	1.25	3.6	3.9	6.7	4.1	1875	3450	0.53	60	-	4x14	5 1/2
2	1.5	230	1.15	9.2	9.8	6.1	3.8	2230	3450	0.57	67	-	4x14	5 1/2
		460	1.15	4.6	4.9	6.7	3.8	2230	3450	0.57	67	-	4x14	5 1/2
3	2.2	230	1.15	11.2	12.0	7.5	4.8	3160	3450	0.69	71	-	4x14	5 1/2
		460	1.15	5.6	6.0	7.1	4.8	3160	3450	0.69	71	-	4x14	5 1/2
5	4	230	1.15	17.8	19.2	7.4	4.0	5230	3450	0.70	77	-	4x14	8 3/4
		460	1.15	8.9	9.6	7.4	4.0	5230	3450	0.70	77	-	4x14	8 3/4
7 1/2	5.5	230	1.15	24.0	26.0	7.5	3.8	7100	3450	0.71	78	-	4x14	8 3/4
		460	1.15	12.0	13.0	7.5	3.8	7100	3450	0.71	78	-	4x14	8 3/4
10	7.5	460	1.15	15.4	16.6	7.1	3.9	9300	3450	0.78	80	-	4x14	11 1/2

Table 12: 6" THREE-WIRE MOTOR DATA / ELECTRICAL DATA

Three Phase Motor

P2		V	SF	In	In (SF)	Is/In	P1	N	Cos φ	η	Star*	ø	LC
[HP]	[kW]	[V]		[A]	[A]		[W]	[min^{-1}]		%		[AWG]	[ft]
5	4	230	1.15	18.5	20.0	5.1	5700	3450	0.77	70	Δ	4x11	13
		460	1.15	8.6	9.5	5.5	5700	3470	0.83	70	Y	4x11	13
		575	1.15	6.9	7.6	5.5	5700	3470	0.83	70	Y	4x11	13
7 1/2	5.5	230	1.15	24.0	26.6	5.0	7400	3480	0.77	74	Δ	4x11	13
		460	1.15	12.0	13.3	5.0	7400	3480	0.77	74	Y	4x11	13
		575	1.15	9.6	10.6	5.0	7400	3470	0.77	74	Y	4x11	13
10	7.5	230	1.15	34.0	37.0	4.8	9900	3465	0.73	76	Δ	4x11	13
		460	1.15	15.0	16.5	5.5	9900	3465	0.83	76	Y	4x11	13
		575	1.15	12.0	13.2	5.5	9900	3465	0.83	76	Y	4x11	13
15	11	230	1.15	50.0	54.0	4.4	13400	3495	0.67	82	Δ	4x9	13
		460	1.15	21.0	23.3	5.2	13400	3495	0.80	82	Y	4x11	13
		575	1.15	16.8	18.6	5.2	13400	3480	0.80	82	Y	4x11	13
20	15	230	1.15	63.0	68.0	4.8	18200	3475	0.73	82	Δ	4x9	13
		460	1.15	27.6	30.8	5.4	18200	3475	0.83	82	Y	4x11	13
		575	1.15	22.1	24.6	5.4	18200	3475	0.83	82	Y	4x11	13
25	18.5	230	1.15	73.4	80.0	5.7	22200	3475	0.76	83	Δ	4x8	13
		460	1.15	36.7	40.0	5.7	22200	3475	0.76	83	Y	4x9	13
		575	1.15	29.3	32.0	5.7	22200	3475	0.76	83	Y	4x9	13
30	22	230	1.15	95.0	105.0	5.5	26500	3480	0.70	83	Δ	4x8	13
		460	1.15	44.7	49.8	5.8	26500	3480	0.74	83	Y	4x9	13
		575	1.15	35.7	39.8	5.8	26500	3480	0.75	83	Y	4x9	13
40	30	460	1.15	54.0	62.0	6.3	35700	3480	0.83	84	Y	4x8	13
		575	1.15	43.2	49.6	6.3	35700	3480	0.83	84	Y	4x8	13
50	37	460	1.15	69.0	77.0	6.1	44800	3480	0.82	83	Y	4x8	13
		575	1.15	55.0	62.0	6.2	44800	3480	0.82	83	Y	4x8	13
60	45	460	1.15	82.0	92.0	6.5	53500	3450	0.83	84	Y	4x8	13

*Star-Delta (Δ) version 230/380V available

P2: Rated output
In: Rated current
Cs/Cn: Locked rotor Torque/Rated Torque
Cos φ: Power factor
ø: Cable section
V: Rated voltage
In (SF): Service factor currect
P1: Power consumption
η: Efficiency
LC: Cable length
SF: Service factor
Is/In: Locked rotor current/Rated current
N: R.P.M
C: Capacitor

SINGLE PHASE MOTOR WINDING RESISTANCES

Table 13: 4" MOTOR WINDING RESISTANCES
Single Phase - Two-Wire

P2		V	+/- 15% WINDING RESISTANCE
[HP]	[kW]	[V]	
1/2	0.37	115	0.95
		230	3.7
3/4	0.5	230	2.5
1	0.75	230	1.9
1 1/2	1.1	230	1.45

Table 14: 4" MOTOR WINDING RESISTANCES
Single Phase - Three-Wire

P2		V	+/- 5% *MAIN RESISTANCE	+/- 5% *START RESISTANCE
[HP]	[kW]	[V]		
1/2	0.37	115	1.2	4.9
		230	3.9	15
3/4	0.5	230	3.0	10.8
1	0.75	230	2.4	9.9
1 1/2	1.1	230	1.8	9.1
2	1.5	230	1.9	5.7
3	2.2	230	1.2	2.5
5	3.0	230	0.8	1.5

Table 15: 6" MOTOR WINDING RESISTANCES
Single Phase - Three-Wire

P2		V	+/- 5% *MAIN RESISTANCE	+/- 5% *START RESISTANCE
[HP]	[kW]	[V]		
7 1/2	5.0	230	0.39	1.37
10	7.5	230	0.36	0.79
15	11	230	0.27	0.52

Table 16: 4" MOTOR WINDING RESISTANCES
Three Phase

P2		V	+/- 5% WINDING RESISTANCE
[HP]	[kW]	[V]	
1/2	0.37	230	5.8
		460	25.6
		575	39
3/4	0.37	230	3.9
		460	17.3
		575	26
1	0.37	230	2.4
		460	13
		575	19.7
1 1/2	0.37	230	2.2
		460	8.9
		575	14.6
2	0.37	230	1.5
		460	6
		575	9
3	0.37	230	1.3
		460	5.1
		575	7.7
5	0.37	230	0.83
		460	3.3
		575	5.2
7 1/2	0.37	230	.06
		460	2.35
		575	3.7
10	0.37	460	2
		575	3.2

Table 17: 6" MOTOR WINDING RESISTANCES
Three Phase

P2		V	+/- 5% WINDING RESISTANCE
[HP]	[kW]	[V]	
5	4	230	0.73
		460	3
		575	3.75
7 1/2	5.5	230	0.55
		460	2
		575	2.5
10	7.5	230	0.36
		460	1.6
		575	2
15	11	230	0.22
		460	0.95
		575	1.15
20	15	230	0.19
		460	0.7
		575	0.81
25	18.5	230	0.14
		460	0.58
		575	0.68
30	22	230	0.11
		460	0.5
		575	0.57
40	30	460	0.33
		575	0.38
50	37	460	0.26
		575	0.31
60	45	460	0.25
		575	0.30

***Main resistance:** Yellow - Black
***Start resistance:** Yellow - Red

MAXIMUM CABLE LENGTHS IN FT.

Table 18: SINGLE PHASE 60 Hz

Motor Rating		Copper Wire Size												
Volts	HP	14	12	10	8	6	4	2	0	00	000	0000	250	300
115	1/2	100	160	250	390	620	960	1460	2160	2630	3140	3770		
230	1/2	400	650	1020	1610	2510	3880	5880	8720					
	3/4	300	480	760	1200	1870	2890	4370	6470	7870	9380			
	1	250	400	630	990	1540	2380	3610	5360	6520	7780	9350		
	1 1/2	190	310	480	770	1200	1870	2850	4280	5240	6300	7620		
	2	150	250	390	620	970	1530	2360	3620	4480	5470	6700		
	3	120	190	300	470	750	1190	1850	2890	3610	4470	5550		
	5			180	280	450	710	1110	1740	2170	2680			
	7 1/2				200	310	490	750	1140	1410	1720			
	10					250	390	600	930	1160	1430	1760		
	15						270	430	660	820	1020	1260		

Table 18: THREE PHASE 60 Hz

Motor Rating		Copper Wire Size												
Volts	HP	14	12	10	8	6	4	2	0	00	000	0000	250	300
230	1/2	930	1490	2350	3700	5760	8910							
	3/4	670	1080	1700	2580	4190	6490	9860						
	1	560	910	1430	2260	3520	5460	8290						
	1 1/2	420	670	1060	1670	2610	4050	6160	9170					
	2	320	510	810	1280	2010	3130	4770	7170	8780				
	3	240	390	620	990	1540	2400	3660	5470	6690	8020	9680		
	5		230	370	590	920	1430	2190	3290	4030	4850	5870	6650	7560
	7 1/2			230	420	650	1020	1560	2340	2870	3440	4160	4710	5340
	10				310	490	760	1170	1760	2160	2610	3160	3590	4100
	15					330	520	800	1200	1470	1780	2150	2440	2780
	20						400	610	930	1140	1380	1680	1910	2180
	25						320	500	750	920	1120	1360	1540	1760
	30							410	620	760	930	1130	1280	1470
460	3/4	2730	4350	6850										
	1	2300	3670	5770	9070									
	1 1/2	1700	2710	4270	6730									
	2	1300	2070	3270	5150	8050								
	3	1000	1600	2520	3970	6200								
	5	590	950	1500	2360	3700	5750							
	7 1/2	420	680	1070	1690	2640	4100	6260						
	10	310	500	790	1250	1960	3050	4680	7050					
	15			540	850	1340	2090	3200	4810	5900	7110			
	20			410	650	1030	1610	2470	3730	4580	5530			
	25				530	830	1300	1990	3010	3700	4470	5430		
	30				430	680	1070	1640	2490	3060	3700	4500	5130	5860
	40						790	1210	1830	2250	2710	3290	3730	4250
	50						640	980	1480	1810	2190	2650	3010	3420
	60							830	1250	1540	1850	2240	2540	2890
575	1	3630	5800	9120										
	1 1/2	2620	4180	6580										
	2	2030	3250	110	8060									
	3	1580	2530	3980	6270									
	5	920	1480	2330	3680	5750								
	7 1/2	660	1060	1680	2650	4150								
	10	490	780	1240	1950	3060	4770							
	15		530	850	1340	2090	3260							
	20			650	1030	1610	2520	3860	5830					
	25			520	830	1300	2030	3110	4710					
	30				680	1070	1670	2560	3880	4770	5780	7030	8000	
	40					790	1240	1900	2860	3510	4230	5140	5830	
	50						1000	1540	2310	2840	3420	4140	4700	5340
	60						850	1300	1960	2400	2890	3500	3970	4520

TIGHTENING MOTOR LEAD CONNECTOR SCREWS

4” Motors: 1.1 to 1.4 ft-lb.
6” Motors: 1.1 to 1.4 ft-lb.

Screws tightening torques recommended for field assembly are shown. Rubber compression set within the first few hours after assembly may reduce the screws torque. This is a normal condition which does not indicate reduced seal effectiveness. Retightening is not required, but is permissible and recommended if original torque was questionable.

A motor lead assembly should not be reused. A new lead assembly should be used whenever one is removed from the motor, because rubber set and possible damage from removal may prevent proper resealing of the old lead.

All motors returned for warranty consideration must have the lead returned with the motor.

SHAFT HEIGHT

Table 19: MOTOR SHAFT HEIGHTS

Motor	Normal Shaft Height	Dimension Shaft Height	Free End Play	
			Min	Max
4”	1.5”	1.508”	0.010”	0.045”
		1.498”		
6”	2.867”	2.875”	0.014”	0.045”
		2.860”		

4” CONTROL BOX DIMENSIONS TYPE CSIR

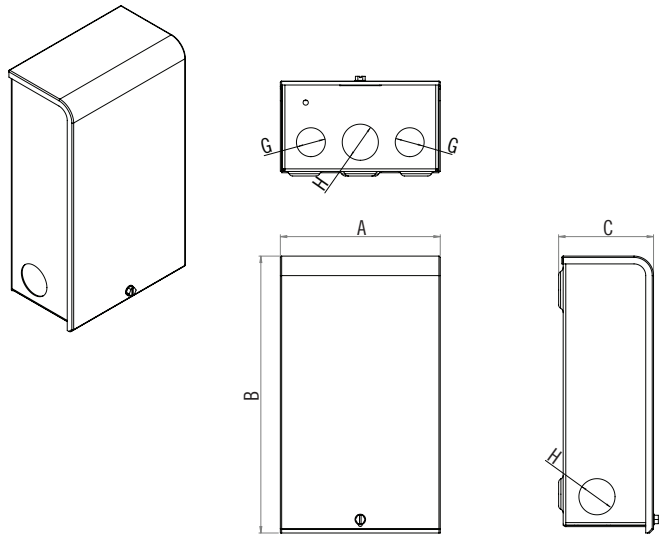

Standard Control Box & Knockout Dimension

Pos.	inch
A	4.9”
B	8.2”
C	2.9”
G	1/2” conduit
H	3/4” conduit

A.Y. McDonald Part No.	A.Y. McDonald Model No.	HP	Voltage	HZ	KW	Start Cap. Part No.	[µF]	Volts	Relay Part No.
6619-004	SC0413 0.5HP115VS	1/2	115	60	.37	3132-648	250-300	125	3132-652
6619-005	SC0413 0.5HP230VS	1/2	230	60	.37	3132-649	59-71	250	3132-653
6619-014	SC0413 0.75HP230VS	3/4	230	60	.55	3132-650	86-103	250	3132-654
6619-015	SC0413 1HP230VS	1	230	60	.75	3132-651	105-126	250	3132-655

4” CONTROL BOX DIMENSIONS TYPE CSCR

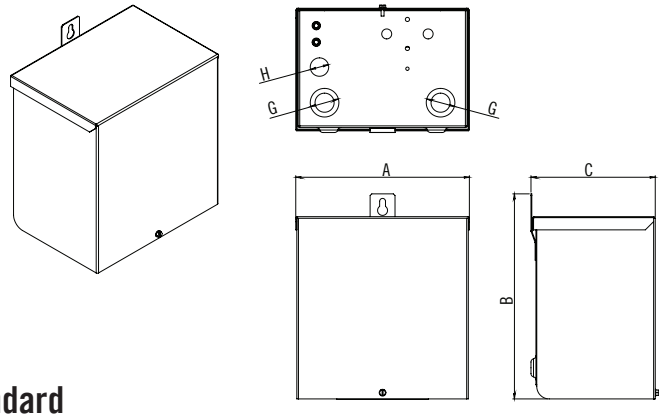

Control Box Dimension

Pos.	inch
A	8.3”
B	9.8”
C	5.9”
G	1” conduit
H	1/2” conduit

Standard

- For use with three wire single phase submersible motors 1 1/2 through 5 HP. Capacitor start and Capacitor run.

A.Y. McDonald Part No.	A.Y. McDonald Model No.	HP	Voltage	HZ	KW	Run Cap. Part No.	[µF]	Volts	Start Cap. Part No.	[µF]	Volts	Start Overload Part No.	Main Overload Part No.	Relay Part No.	Contactor Part No.
6619-012	SC0413 1.5HP230VS	1 1/2	230	60	1.1	3132-672	10	370	3132-664	105-126	250	-	3132-688	3132-696	-
6619-006	SC0413 2HP230VS	2	230	60	1.5	3132-674	20	370	3132-666	105-126	250	3132-682	3132-690	3132-698	-
6619-007	SC0413 3HP230VS	3	230	60	2.2	3132-676	45	370	3132-668	208-250	250	3132-684	3132-692	3132-700	-
6619-008	SC0413 5HP230VS	5	230	60	3	3132-678	80	370	3132-670	270-324	250	3132-686	3132-694	3132-702	-

Deluxe

- For use with three wire single phase submersible motors 1/2 through 5 HP. Includes Magnetic Line Contactor, Capacitor start, and Capacitor run.

A.Y. McDonald Part No.	A.Y. McDonald Model No.	HP	Voltage	HZ	KW	Run Cap. Part No.	[µF]	Volts	Start Cap. Part No.	[µF]	Volts	Start Overload Part No.	Main Overload Part No.	Relay Part No.	Contactor Part No.
6619-013	SC0413 1.5HP230VD	1 1/2	230	60	1.1	3132-673	10	370	3132-665	105-126	250	3132-681	3132-689	3132-697	3132-705
6619-010	SC0413 2HP230VD	2	230	60	1.5	3132-675	20	370	3132-667	105-126	250	3132-683	3132-691	3132-699	3132-707
6619-011	SC0413 3HP230VD	3	230	60	2.2	3132-677	45	370	3132-669	208-250	250	3132-685	3132-693	3132-701	3132-709
6619-009	SC0413 5HP230VD	5	230	60	3	3132-679	80	370	3132-671	270-324	250	3132-687	3132-695	3132-703	3132-711

6” CONTROL BOX DIMENSIONS TYPE CSCR

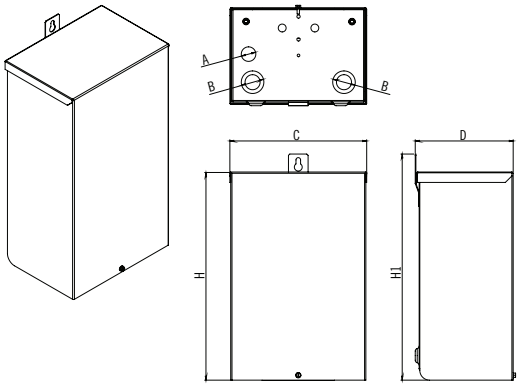

Control Box Dimension

Pos.	inch
A	1/2” conduit
B	1” conduit
C	8.268”
D	6.299”
H	15.433”
H1	16.535”

Deluxe Single Phase Control Boxes

- For use with 3-wire, single phase submersible motors 7 1/2 hp - 15 hp. Includes Magnetic Line Contactor, Capacitor Start and Capacitor Run.

A.Y. McDonald Part No.	A.Y. McDonald Model No.	HP	Voltage	HZ	KW	Run Cap. Part No.	[µF]	Volts	Start Cap. Part No.	[µF]	Volts	Start Overload Part No.	Main Overload Part No.	Relay Part No.	Contactor Part No.
6619-001	SC0613 7.5HP230VD	7 1/2	230	60	5.0	3132-633	45	370	3132-630	270-324	330	3132-636	3132-639	3132-642	3132-645
										216-260	330				
6619-002	SC0613 10HP230VD	10	230	60	7.5	3132-634	35	370	3132-631	270-324	330	3132-637	3132-640	3132-643	3132-646
							35	370		216-260	330				
										130-156	330				
6619-003	SC0613 15HP230VD	15	230	60	11	3132-635	45	370	3132-632	270-324	330	3132-638	3132-641	3132-644	3132-647
							45	370		270-324	330				
							45	370		161-193	330				

800.292.2737 | sales@aymcdonald.com | aymcdonald.com

4" - CONTROL BOX - WIRING DIAGRAMS - CSIR SERIES

TO PREVENT HAZARD OF FATAL OR SERIOUS ELECTRIC SHOCK :

Connect this control enclosure, all metal plumbing, and the motor frame to the power supply grounding terminal using copper wire complying with electrical codes. A ground wire at least the size of power wires complies. Smaller wire may comply under some conditions.

Permanently close all unused wiring opening inside this and other equipment.

Switch off power to this circuit at the power supply panel (not in this control) before working on or around the control, pipes, cable, pump or motor.

INSTALLATION AND OPERATION:

Mounting – Be sure that the control box is mounted in a vertical position with the top side up. If it is mounted in any other position, the starting relay may not function and the overload may trip.

Connections – The control box should be wired to the line and the motors as shown in the diagram. The pump will not operate without this control box.
Operation without the control box will burn out the motor. Installation of this motor and control must include circuit and component protection in compliance with U.S. National Electrical Code or Canadian Electrical Code, Part.1

Protection – Trip of overload indicates a shorted capacitor, voltage problems, an overloaded or locked pump, or the start relay should be replaced. Reset and analyse for tripping cause.
Do not remove or short out overload protection, since doing so is likely to cause motor burnout.

Use 75° C copper wires/conductors only, 14-10 AWG, tightening torque 20lbs*inch.

For guarantee the Enclosure Type 3R needs to be mounted using the 3 mounting holes.

0.5 – 0.75 1HP 60HZ 115/230V

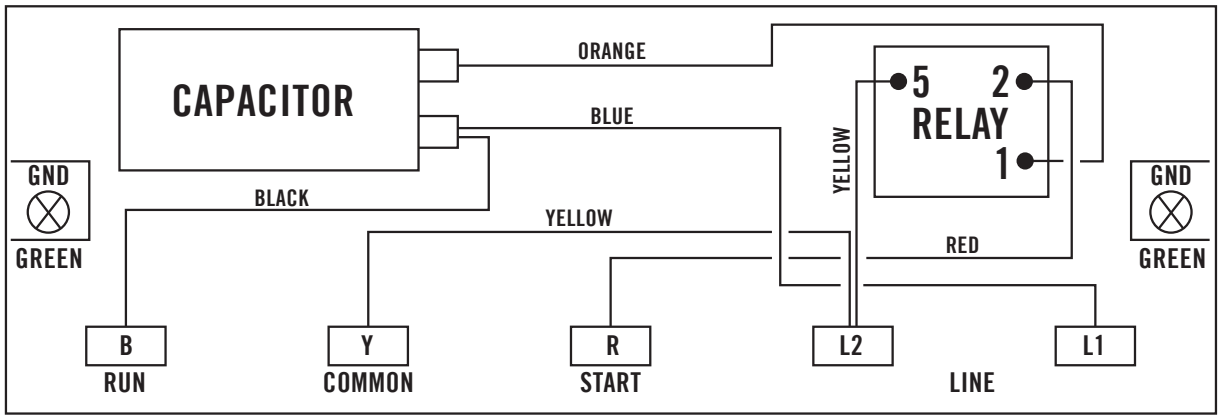

How to check the color code of a drop cable (Single-Phase 3-Wire Units)

With an ohmmeter measure:
Cable 1 to Cable 2, Cable 2 to Cable 3, Cable 3 to Cable 1
Find the highest resistance reading.
The lead not used in the highest reading is the yellow lead.
Use the yellow lead and each of the other two leads to get two readings:
Highest is the red lead.
Lowest is the black lead.

EXAMPLE:

The ohmmeter readings were:

Cable 1 to Cable 2 - 6 ohms	Cable 2 to Cable 3 - 2 ohms	Cable 3 to Cable 1 - 4 ohms
The lead not used in the highest reading (6 ohms) was Cable 3 so		Cable 3 = **Yellow**
From the yellow lead, the highest reading (4 ohms) was To Cable 1 so		Cable 1 = **Red**
From the yellow lead, the lowest reading (2 ohms) was To Cable 2 so		Cable 2 = **Black**

4" - CONTROL BOX - WIRING DIAGRAMS - CSCR SERIES

TO PREVENT HAZARD OF FATAL OR SERIOUS ELECTRIC SHOCK :

Connect this control enclosure, all metal plumbing, and the motor frame to the power supply grounding terminal using copper wire complying with electrical codes. A ground wire at least the size of power wires complies. Smaller wire may comply under some conditions.

Permanently close all unused wiring opening inside this and other equipment.

Switch off power to this circuit at the power supply panel (not in this control) before working on or around the control, pipes, cable, pump or motor.

INSTALLATION AND OPERATION:

Mounting – Be sure that the control box is mounted in a vertical position with the top side up. If it is mounted in any other position, the starting relay may not function and the overload may trip.

Connections – The control box should be wired to the line and the motors as shown in the diagram. The pump will not operate without this control box.
Operation without the control box will burn out the motor. Installation of this motor and control must include circuit and component protection in compliance with U.S. National Electrical Code or Canadian Electrical Code, Part.1

Protection – Trip of overload indicates a shorted capacitor, voltage problems, an overloaded or locked pump, or the start relay should be replaced. Reset and analyse for tripping cause.
Do not remove or short out overload protection, since doing so is likely to cause motor burnout.

Use 75° C copper wires/conductors only, 14-10 AWG, tightening torque 20lbs*inch.

For guarantee the Enclosure Type 3R needs to be mounted using the 3 mounting holes.

CHECKING PROCEDURE: BE SURE POWER IS TURNED OFF:

A) OVERLOAD (Push reset button to make sure contacts are closed)

1. Ohmmeter setting: (Rx1).
2. Terminal connections: ohmmeter leads to overload terminals.
3. Ohmmeter reading: should not be over 0.5 ohms.

B) CAPACITOR (Disconnect one lead from each capacitor prior to checking)

1. Ohmmeter setting: (Rx1000).
2. Terminal connections: individual capacitor teminals.
3. Ohmmeter reading: pointer should swing toward zero then drift back toward infinity.

C) RELAY COIL (Disconnect lead from terminal 5)

1. Ohmmeter setting: (Rx1000).
2. Terminal connections: "5" and "2" on relay.
3. Ohmmeter reading: 4500-7000 ohms

D) RELAY CONTACT (Disconnect lead from terminal 1)

1. Ohmmeter setting: (Rx1).
2. Terminal connections: "1" and "2" on relay.
3. Ohmmeter reading: should be zero.

E) MAGNETIC CONTACTOR ONLY (Disconnect 1 coil lead)

1. Ohmmeter setting: (Rx100).
2. Check coil resistance: 1000-1400 ohms.
3. Remove contact cover and inspect contacts

4” - CONTROL BOX - WIRING DIAGRAMS - CSCR SERIES

1 1/2 HP 230V 60 Hz DELUXE

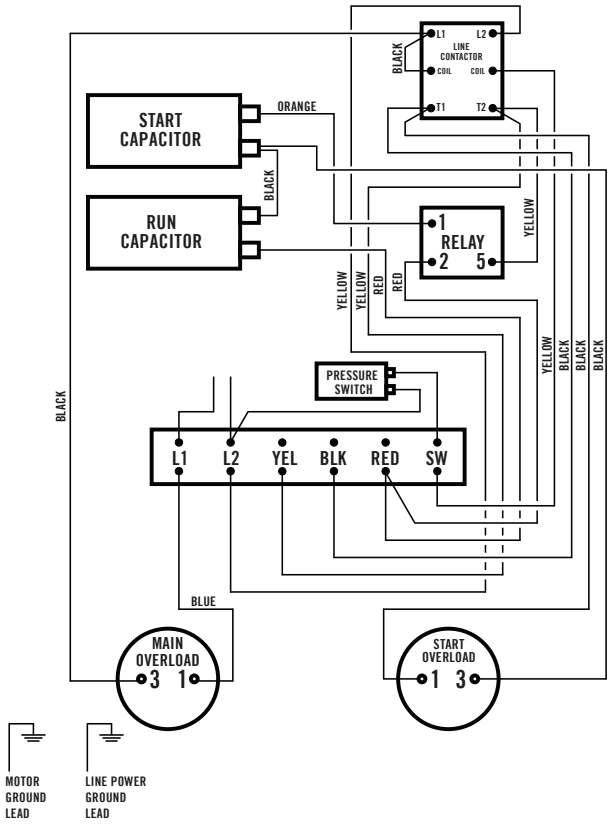

1 1/2 HP 230V 60 Hz STANDARD

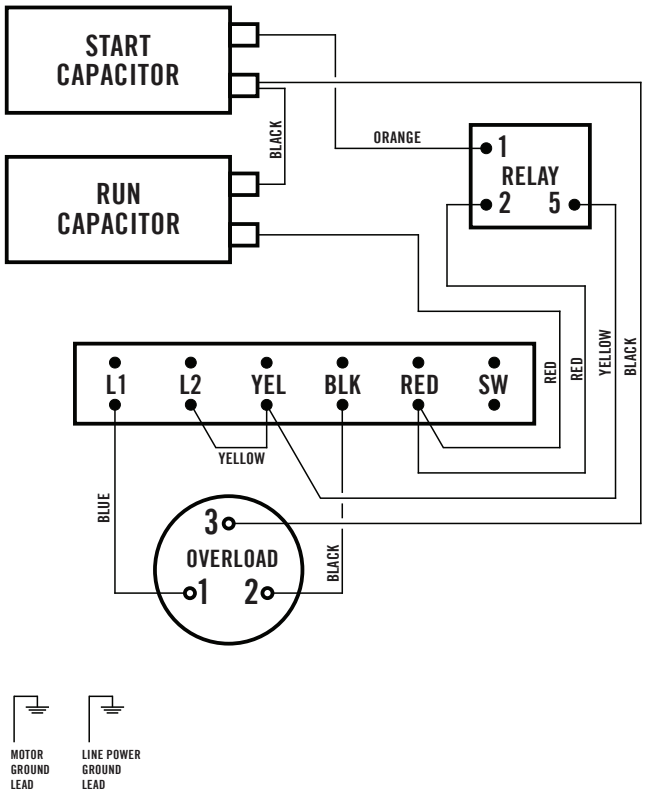

2 HP 230V 60 Hz DELUXE

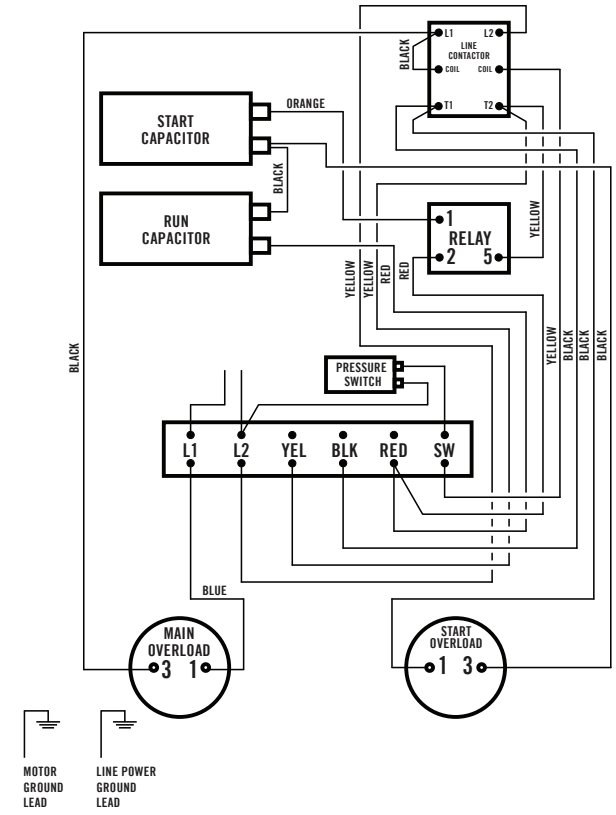

2 HP 230V 60 Hz STANDARD

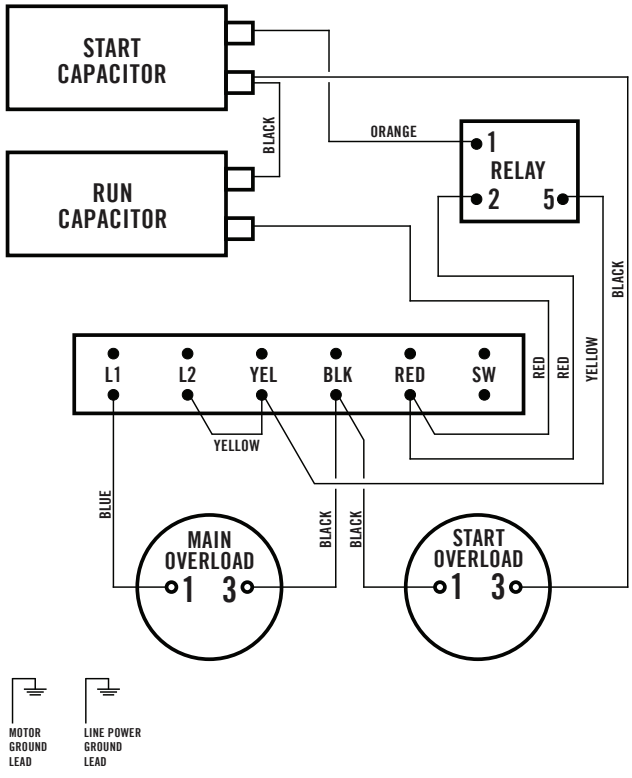

6” - CONTROL BOX - WIRING DIAGRAMS - CSCR SERIES

3 HP 230V 60 Hz DELUXE

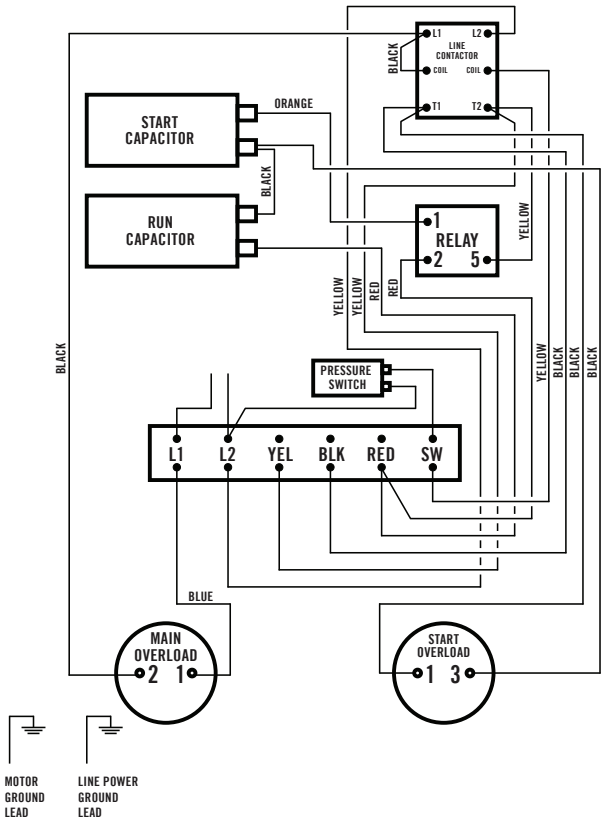

3 HP 230V 60 Hz STANDARD

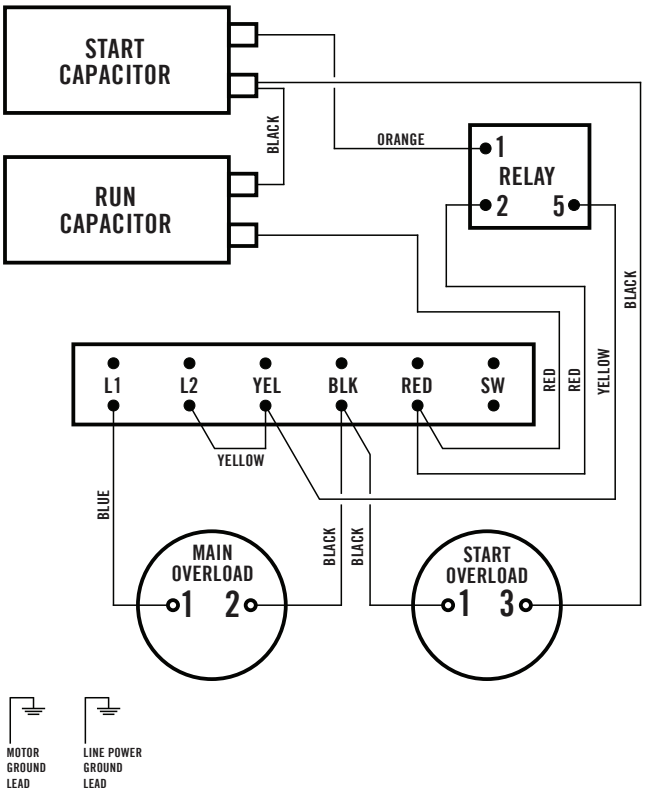

5 HP 230V 60 Hz DELUXE

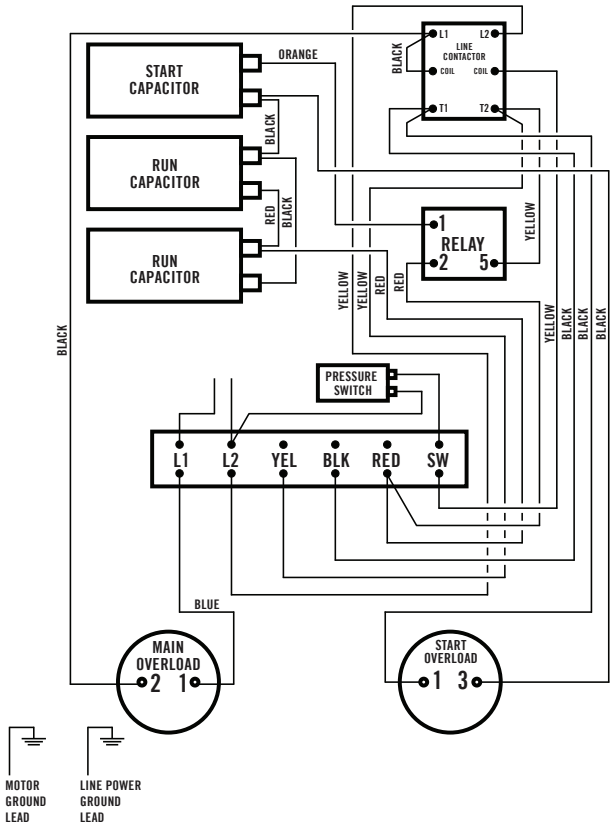

5 HP 230V 60 Hz STANDARD

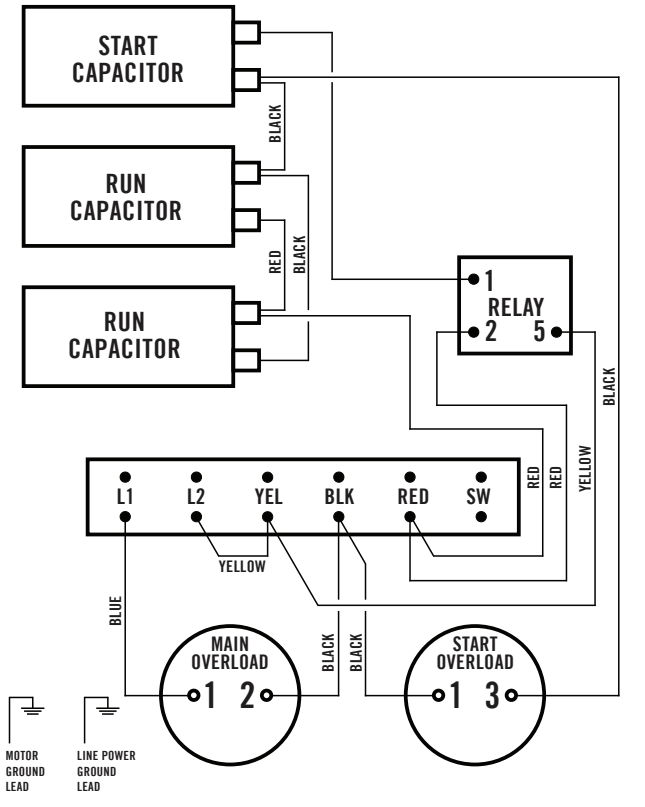

6” - CONTROL BOX - WIRING DIAGRAMS - CSCR SERIES

7 1/2 HP 230V 60 Hz DELUXE

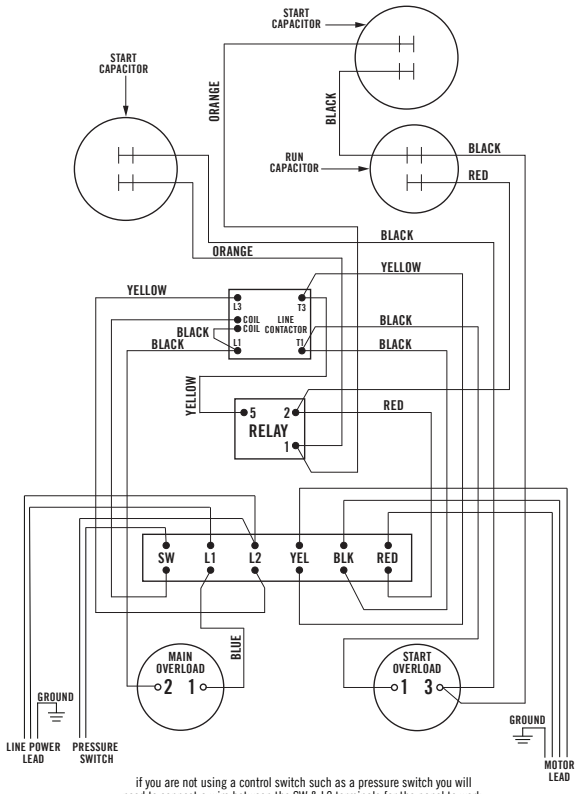

if you are not using a control switch such as a pressure switch you will need to connect a wire between the SW & L2 terminals for the panel to work.

10 HP 230V 60 Hz DELUXE

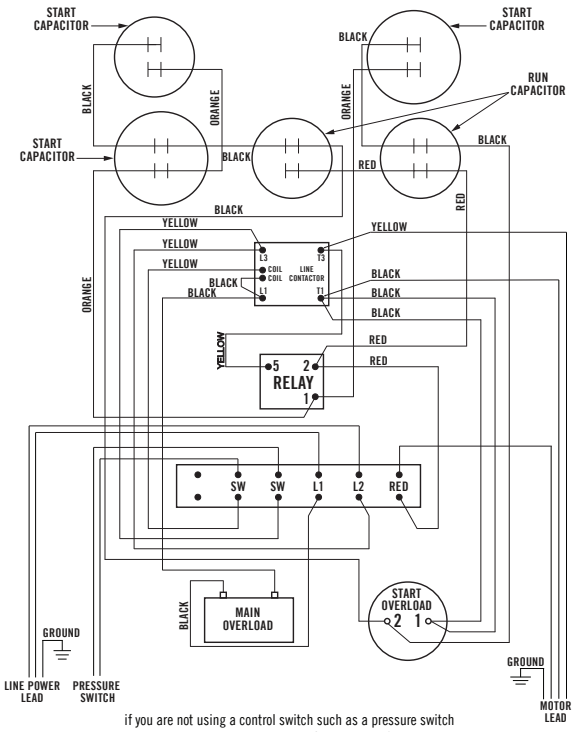

if you are not using a control switch such as a pressure switch
you will need to connect a wire between the SW terminals for the panel to work.

15 HP 230V 60 Hz DELUXE

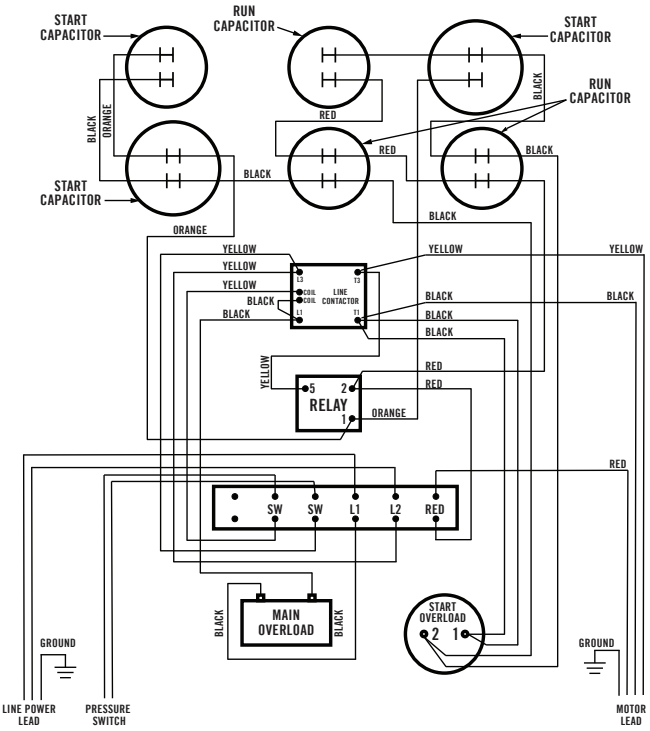

if you are not using a control switch such as a pressure switch you will need to connect a wire between the SW terminals for the panel to work.

THREE PHASE POWER UNBALANCE

TO PREVENT HAZARD OF FATAL OR SERIOUS ELECTRIC SHOCK :

A full three phase supply is recommended for all three phase motors, consisting of three individual transformers or one three phase transformer. So-called “open” delta or wye connections using only two transformers can be used, but are more likely to cause problems, such as poor performance overload tripping or early motor failure due to current unbalance.

Transformer ratings should be no smaller than listed on Transformer Size Chart on page 28.

OPEN DELTA OR WYE

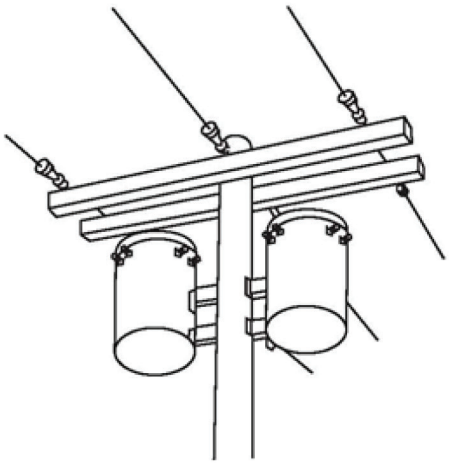

FULL THREE PHASE

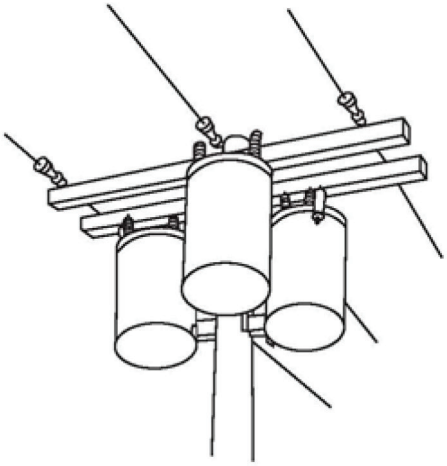

Checking and correcting rotation and current unbalance.

1. Establish correct motor rotation by running in both directions. Change rotation by exchanging any two of the three motor leads. The rotation that gives the most water flow is always the correct rotation.

2. After correct rotation has been established, check the current in each of the three motor leads and calculate the current unbalance as explained in 3 below. If the current unbalance is 2% or less, leave the leads as connected. If the current unbalance is more than 2%, current read-ings should be checked on each leg using each of the three possible hook-ups. Roll the motor leads across the starter in the same direction to prevent motor reversal.

3. To calculate percent of current unbalance:
   A. Add the three line amps values together.
   B. Divide the sum by three, yielding average current.
   C. Pick the amp value which is furthest from the average current (either high or low).
   D. Determine the difference between this amp value (furthest from average) and the average.
   E. Divide the difference by the average. Multiply the result by 100 to determine percent of unbalance.

4. Current unbalance should not exceed 5% at service factor load or 10% at rated input load. If the unbalance cannot be corrected by rolling leads, the source of the unbalance must be located and corrected. If, on the three possible hookups, the leg farthest from the average stays on the same power lead, most of the unbalance is coming from the power source. However, if the reading farthest from average moves with the same motor lead, the primary source of unbalance is on the “motor side” of the starter. In this instance, consider a damaged cable, leaking splice, poor connection, or faulty motor winding.

THREE PHASE POWER UNBALANCE

Phase designation of leads for CCW rotation (viewing shaft end).

To reverse rotation, interchange any two leads

Phase 1 or "A" – Black Motor Lead or T1
Phase 2 or "B" – Yellow Motor Lead or T2
Phase 3 or "C" – Red Motor Lead or T3

Notice: Phase 1, 2, and 3 may not be L1, L2, and L3.

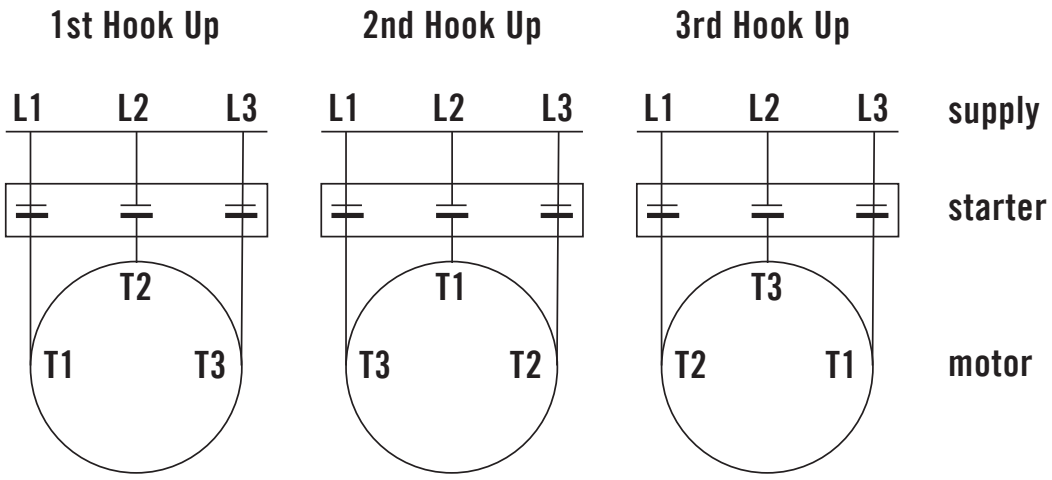

EXAMPLE:

T1 = 51 amps +	T1 = 50 amps +	T1 = 50 amps +
T2 = 46 amps +	T2 = 49 amps +	T2 = 48 amps +
T3 = 53 amps =	T3 = 51 amps =	T3 = 52 amps =
Total = 150 amps	Total = 150 amps	Total = 150 amps
150/3 = 50 amps	150/3 = 50 amps	150/3 = 50 amps
50-46 = 4 amps	50-49 = 1 amps	50-48 = 2 amps
4/50 = 0.08 or 8%	1/50 = 0.02 or 2%	2/50 = 0.04 or 4%

TRANSFORMER SIZES

A full three phase supply is recommended for all three phase motors, consisting of three phase individual transformers or one three phase transformer.

"Open" delta or wye connections using only two transformers can be used, but are more likely to cause problems from current unbalance.

Transformer ratings should be no smaller than listed in the table for supply power to the motor alone.

Table 20: TRANSFORMER SIZING

HP	kW	Required kVa	KVA Rating (smallest) for Each Transformer	
			Open WTE or D 2 Transformers	Closed WYE or D 3 Transformers
1 1/2	1.1	3.0	2.0	1.0
2	1.5	4.0	2.0	1.5
3	2.2	5.0	3.0	2.0
5	3.7	7.5	5.0	3.0
7 1/2	5.5	10	7.5	5.0
10	7.5	10	10.0	5.0

POWER SUPPLY BY A GENERATOR

Attention: the applicable tolerances from main supply must also be applied by power supply via generators

When operating a motor via a generator please bear in mind that the starting current of the motor is five times the nominal motor current and that mean power factor of 0.6 for starting can be expected.

Also make sure that a sufficient generator power is permanently available and that for starting the voltage must be at least 65% of the nominal motor Name plate voltage.

Table 21: GENERATOR SIZING

MOTOR POWER		GENERATOR POWER	
kW	HP	kW	HP
4.0	5.5	10	12.5
5.5	7.5	12.5	15.6
7.5	10	15	18.8
11	15	22.5	28
15	20	30	38
18.5	25	40	50
22	30	45	57
30	40	60	75
37	50	75	100
45	60	100	145

INSULATION TESTING

For the necessary inspections and insulation testing one tool is required:

Insulation measuring tester (Megohmmeter) unit 500v test, display up to min 200 M Ohm.

The correct execution of the junction (hermetic sealing) can be verified testing it under water for at least 15 min and measuring with the Megohmmeter the insulation resistance between the metal recipient, filled with water (or water itself) and each of the phase wires of the cable connected to the motor.

For a new motor the correct measurement has to be at least 200 M Ohm.

Another measure has to be done before installing the motor / pump in the place of use:

1	connect a measuring cable to the ground lead
2	connect the other measuring cable to each conductor of the connected motor cable.

The exact values have to be at least **200 M Ohm** for a new motor, and **20 M Ohm** with a used motor installed.
It is always suggested to repeat this operation various times while lowering the motor/pump in the well.

RESISTANCE OF THE DROP CABLE

The values below are for copper conductors. If aluminum conductor drop cable is used, the resistance will be higher.

To determine the actual resistance of the aluminum drop cable, divide the ohm readings from this chart by 0.61.
This chart shows total resistance of cable from control to motor and back.

Resistance in OHMS per 100 ft. of Wire @ 50ºF

Table 22: DROP CABLE RESISTANCE

AWG WIRE SIZE (COPPER)	RESISTANCE OHMS	MCM WIRE SIZE (COPPER)	RESISTANCE OHMS
14	0.544	250	0.0088
12	0.338	300	0.0073
10	0.214	350	0.0063
8	0.135	400	0.0056
6	0.082	500	0.0044
4	0.052	600	0.0037
2	0.032	700	0.0032
0	0.021		
00	0.017		
000	0.013		
0000	0.010		

When measured through the drop cable, the resistance of the drop cable must be subtracted from the ohm meter readings to get the winding resistance of the motor

BOLT TORQUE SETTINGS

Table 23: TORQUE SETTING

Bolt Size	Torque Setting in Nm (ft-lb)	
M6	Steel 8.8	Stainless Steel 304-316/904
	9 (6.638)	7 (5.163)
M8	Steel 8.8	Stainless Steel 304-316/904
	23 (16.964)	17 (12.539)
M10	Steel 8.8	Stainless Steel 304-316/904
	45 (33.190)	33 (24.340)
M12	Steel 8.8	Stainless Steel 304-316/904
	83 (61.218)	74 (54.580)
M14	Steel 8.8	Stainless Steel 304-316/904
	132 (97.3580)	119 (87.770)
M16	Steel 8.8	Stainless Steel 304-316/904
	200 (147.51)	183 (134.97)
M18	Steel 8.8	Stainless Steel 304-316/904
	275 (202.83)	260 (191.77)
M20	Steel 8.8	Stainless Steel 304-316/904
	390 (287.65)	370 (272.90)

MOTOR WARRANTY FORM

DISTRIBUTOR INFORMATION

Name of Distributor	
Distributor RGA / Warranty #	
Name of Installer	
Name of End User	
Date Submitted	

MOTOR INFORMATION

Motor Distributor	
Part Number	
Serial Number	
Product Date Code	
Date of Installation	
# of Starts Per Day	

POWER AND CABLING

Power Cable Length			
Power Cable Size (Diameter / Gauge)			
Incoming Voltage	L1	L2	L3
Running AMPS	L1	L2	L3
Power Type	Grid:	Generator:	kVA of Gen

CONTROL PANEL

Control Panel Manufacturer & Model		
DOL or VFD		
(DOL) Amperage Setting		
(DOL) Phase Protection?	YES:	NO:
(VFD) Max Amperage		
(VFD) Max Hz		
(VFD) Min Hz		
(VFD) Ramp Time to 30 Hz		

PUMP INFORMATION

Manufacturer			
Model			
Stages			
2-Pole / 4-Pole?	2-Pole	4-Pole:	
Design Rating	GPM:	TDH:	RPM:
Horsepower Required by Design			
Set Depth			
Static Water Level			



A.Y. McDonald Mfg. Co.
4800 Chavenelle Road
Dubuque, IA 52002
563.583.7311 | 800.292.2737 | aymcdonald.com