SUBMITTAL DATA SHEET

NL Ball Style Meter Stop – 76101MW/SHDLB

FNPT x Meter

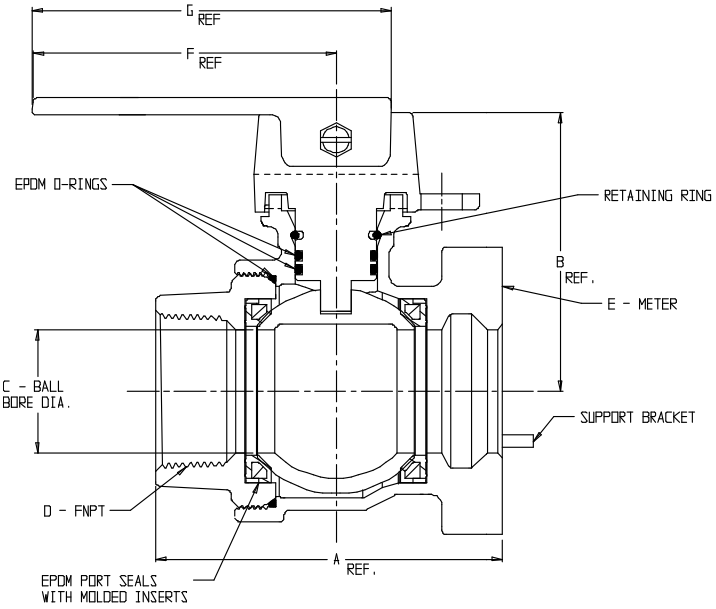

MODEL	SIZE	A	B	C	D	E	F	G
76101MW/SHDLB	1 1/2	4.22	3.40	1.50	1 1/2	1 1/2	3.70	4.38
76101MW/SHDLB	2	5.36	3.71	2.00	2	1 1/2 OR 2	3.70	4.38

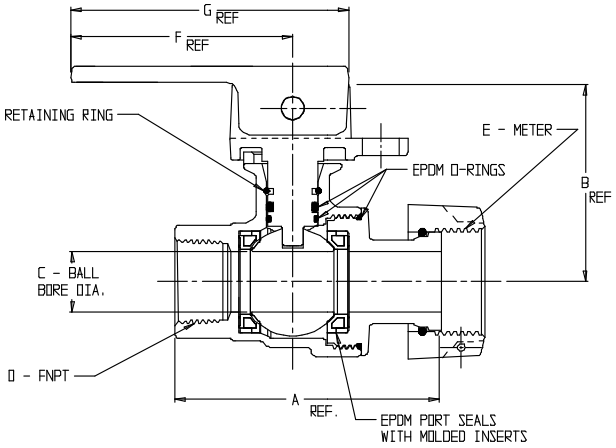

DRAWING MAY NOT RESEMBLE ACTUAL VALVE CONFIGURATION

MODEL	SIZE	A	B	C	D	E	F	G
76101MW/SHDLB	3/4 X 3/4 X 5/8	3.36	2.42	.75	3/4	5/8	2.70	3.38
76101MW/SHDLB	1 X 3/4 X 5/8	3.20	2.42	.75	1	5/8	2.70	3.38
76101MW/SHDLB	3/4	3.20	2.42	.75	3/4	5/8X3/4, 3/4	2.70	3.38
76101MW/SHDLB	3/4 x 3.75	3.75	2.42	.75	3/4	5/8X3/4, 3/4	2.70	3.38
76101MW/SHDLB	3/4 x 4.00	4.00	2.42	.75	3/4	5/8X3/4, 3/4	2.70	3.38
76101MW/SHDLB	1 X 3/4 X 3/4	3.45	2.42	.75	1	5/8X3/4, 3/4	2.70	3.38
76101MW/SHDLB	1 X 3/4 X 1	3.55	2.42	.75	1	1	2.70	3.38
76101MW/SHDLB	1	4.18	2.65	1.00	1	1	2.70	3.38
76101MW/SHDLB	1 1/4 X 1 X 1	4.88	2.65	1.00	1 1/4	1	2.70	3.38

SUBMITTAL INFORMATION

- Manufactured in compliance with ANSI/AWWA C800 (latest revision)
- Brass components in contact with potable water conform to ASTM B584, UNS C89833 (latest revision) and identified with "NL"
- Certified to NSF/ANSI 61 and NSF/ANSI 372
- Brass components not in contact with potable water conform to ASTM B62 and ASTM B584, UNS C83600 -85-5-5-5 (latest revision)
- PTFE coated brass ball
- Rated for 300 PSIG water pressure
- Blow out proof EPDM port seals
- End piece joint sealed with an EPDM o-ring and thread locker

A.Y. McDonald Mfg. Co.
P.O. Box 508
Dubuque, IA 52004-508

Toll Free: 1-800-292-2737
Fax: 1-800-832-9296
Hours: 7:00 a.m. – 5:00 p.m., CST

sales@aymcdonald.com
www.aymcdonald.com

A.Y. McDonald considers the information on this assembly drawing correct when published. Item and option availability, including specifications, are subject to change without notice.

Submitted by: