SUBMITTAL DATA SHEET

NL Angle Plug Style Meter Stop – 74602Y-55 1 x 04

-55 IP Compression x Yoke Star Nut

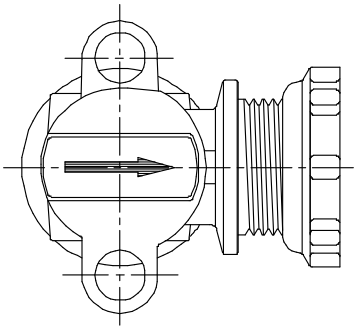

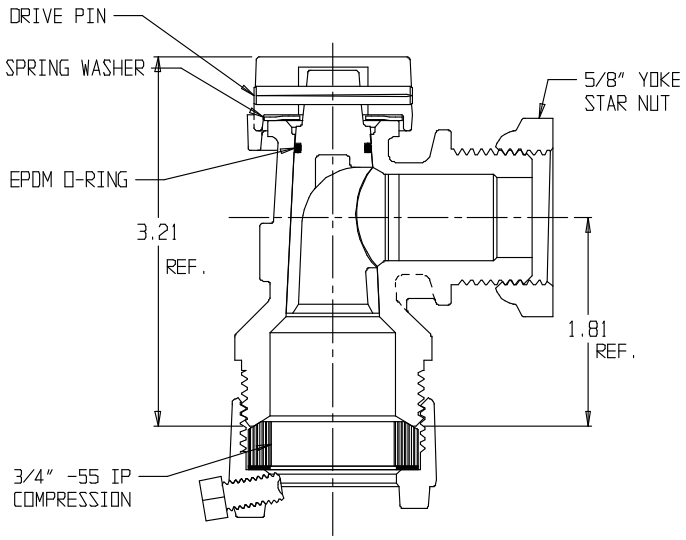

SUBMITTAL INFORMATION

- Manufactured in compliance with ANSI/AWWA C800 (latest revision)
- Brass components in contact with potable water conform to ASTM B584, UNS C89833 (latest revision) and identified with "NL"
- Certified to NSF/ANSI 61 and NSF/ANSI 372
- Brass components not in contact with potable water conform to ASTM B62 and ASTM B584, UNS C83600 -85-5-5-5 (latest revision)
- Large wrench flats provided for proper installation
- Rated for 100 PSIG water pressure

A.Y. McDonald Mfg. Co.
P.O. Box 508
Dubuque, IA 52004-508

Toll Free: 1-800-292-2737
Fax: 1-800-832-9296
Hours: 7:00 a.m. – 5:00 p.m., CST

sales@aymcdonald.com
www.aymcdonald.com

A.Y. McDonald considers the information on this assembly drawing correct when published. Item and option availability, including specifications, are subject to change without notice.

Submitted by: