SUBMITTAL DATA SHEET

NL Service Fitting – 74762Q

Q CTS Compression X Q CTS Compression X MNPT

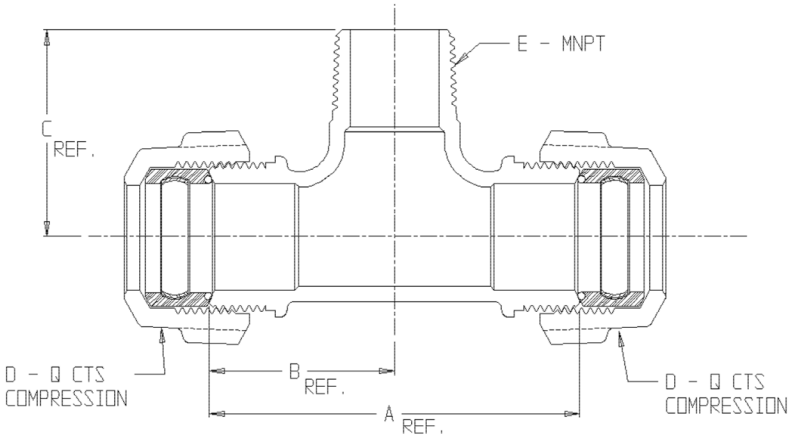

MODEL	SIZE	A	B	C	D	E
74762Q	3/4	3.12	1.56	1.74	3/4	3/4
74762Q	3/4 X 1	3.56	1.78	1.77	3/4	1
74762Q	3/4 X 1 1/2	3.56	1.78	2.00	3/4	1 1/2
74762Q	1	3.52	1.76	1.77	1	1
74762Q	1 1/4 X 1 1/2	4.20	2.10	2.13	1 1/4	1 1/2
74762Q	1 1/2	4.24	2.12	2.12	1 1/2	1 1/2
74762Q	2	5.02	2.51	2.57	2	2

SUBMITTAL INFORMATION

- Manufactured in compliance with ANSI/AWWA C800 (latest revision)
- Brass components in contact with potable water conform to ASTM B584, UNS C89833 (latest revision) and identified with "NL"
- Certified to NSF/ANSI 61 and NSF/ANSI 372
- Brass components not in contact with potable water conform to ASTM B62 and ASTM B584, UNS C83600 -85-5-5-5 (latest revision)
- Large wrench flats provided for proper installation
- Insert stiffeners required on all flexible plastic connections

A.Y. McDonald Mfg. Co.
P.O. Box 508
Dubuque, IA 52004-508

Toll Free: 1-800-292-2737
Fax: 1-800-832-9296
Hours: 7:00 a.m. – 5:00 p.m., CST

sales@aymcdonald.com
www.aymcdonald.com

A.Y. McDonald considers the information on this assembly drawing correct when published. Item and option availability, including specifications, are subject to change without notice.

Submitted by: