SUBMITTAL DATA SHEET

Sump, Sewage, & Effluent Pumps

DuraMAC™ | Guardian

5030CTSP Sump Pump



5 YEAR LIMITED WARRANTY

See Pumps & Accessories Price List for Limited Warranty details.

With a rugged cast iron construction, the 5030CTSP can handle up to 46 gallons per minute.

Sump Pump Performance Curve

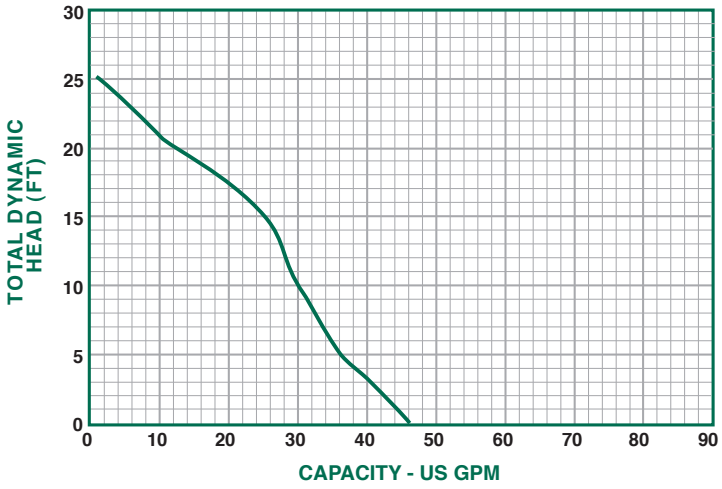

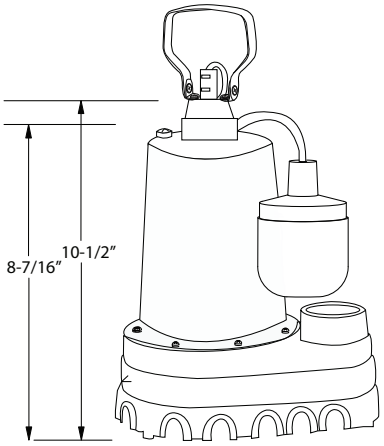

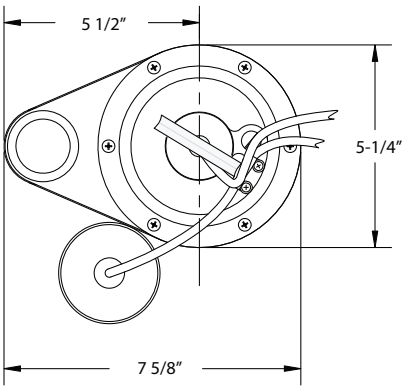

PERFORMANCE CHART						
Model	Gallons per Minute in Feet					
	0	5	10	15	20	25
5030CTSP	46	36	30	25	12	1

SUBMERSIBLE CAST IRON SUMP PUMP - 1 1/2" DISCHARGE										
Model	HP	Volts	Hz	Amps	Construction	Discharge Size	Cord Length	Solids Handling	RPM	Phase
5030CTSP	3/10	120	60	4.1	Cast Iron	1 1/2"	10'	3/8"	3450	1

SUBMITTAL INFORMATION

- Split Capacitor Motor - 3/10 HP continuous duty, thermal protected
- Lifts water up to 25' of vertical height
- 10' power cord, 25' cords are available for an additional charge
- Large 1 1/2" discharge for high capacity pumping
- Non clogging stainless steel impeller
- Tethered float switch

NO-LEAD: The weighted average of the wetted surface of this no-lead product contacted by consumable water contains less than one quarter of one percent (0.25%) lead.

EST. 1856 McDonald

A.Y. McDonald Mfg. Co.
P.O. Box 508
Dubuque, IA 52004-0508

Toll Free: 1-800-292-2737
Fax: 1-800-832-9296
Hours: 7:00 a.m. - 5:00 p.m., CST

sales@aymcdonald.com
www.aymcdonald.com

A.Y. McDonald considers the information on this assembly drawing correct when published. Item and option availability, including specifications, are subject to change without notice.

Submitted by: