SUBMITTAL DATA SHEET

Dewatering Pumps

Electric & DC Powered | Engine Driven

2” Engine Driven | Dredging Pump

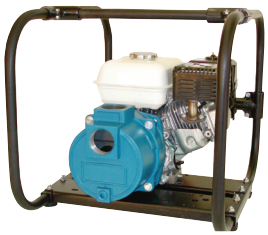

A.Y. McDonald engine driven dredging pump is designed for pumping sea water and fresh water containing up to 25% sand, debris, and other abrasive particles.

This pump is constructed of wear resistant high chromium stainless steel internal components that are designed to last for over 500 hours of service with regular maintenance of rinsing pump after each use. The high chromium stainless steel components are investment cast and CNC machined for maximum efficiency, performance and quality. Dual volute design reduces radial load on engine. The pump is coupled to a 5 1/2 HP Honda engine that is also known for reliability and easy starting. The four bolt casing design and removable type volute offer simple maintenance and fast cleanout of the pump. A.Y. McDonald Dredging pumps are reliable, cost effective, and low maintenance.

Applications

Besides pumping seawater, this unit can be used for other marine applications including dredging, pile driving, pier maintenance, emergency bilging, and wash down. For use with non-flammable liquids compatible with pump component materials.

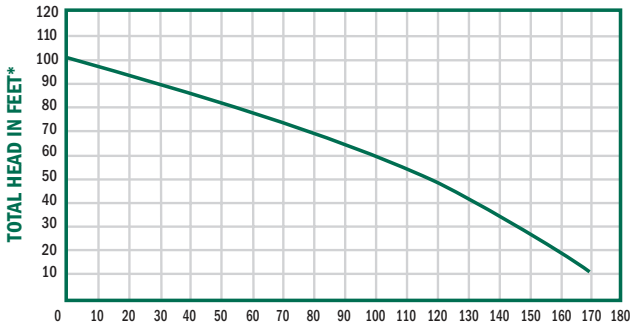

*CONVERT TO PSI, DIVIDE BY 2.31 | LIQUID WATER SPECIFIC GRAVITY 1.0

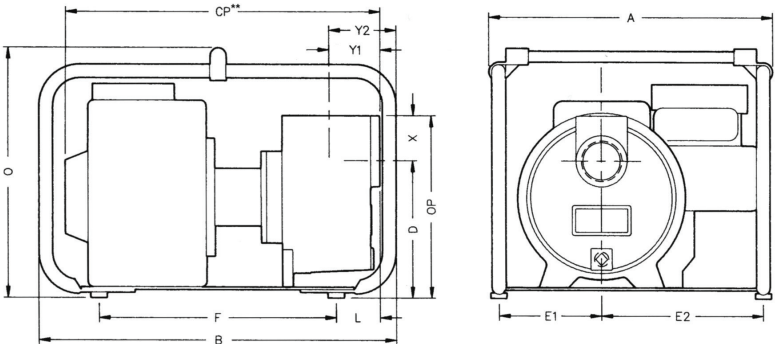

Dimensions

Model No.	HP	A	B	CP**	D	E1	E2	F	L	O	OP	X	Y1	Y2	Suct.	Disch.
02J5HCR	5 1/2	19.5	24.3	19.0	6.8	7.0	11.0	9.3	6.0	20	9.5	2.6	3.1	4.6	2"	2"

(*) This dimension may vary due to engine manufacturer's specifications. | NOTE: Dimensions have a tolerance of ± 1/8".

2” Dredging Pumps

Model No.	Port Size	Driver	Construction	Shaft Seal	Run Time	Tank Size	Max Solids	Ship Wt.
02J5HCR	2" NPT	5.5 HP Honda GX160 OHV with oil alert	Cast iron w/ high Chromium stainless Steel wear Parts	Silicon carbide w/Buna-N	100 min.	3.8 qt.	1/2"	85 lbs.

Solids Handling - 1/2” diameter | *Viton® is a registered trademarks of DuPont. **SIC = Silicon Carbide

SUBMITTAL INFORMATION

- High chromium stainless steel internal components resist wear from sea water mixed with abrasive sand
- Silicon carbide mechanical seal resists abrasives and extends seal lift
- Heavy duty cast iron casing and adapter ensures durability for severe service conditions
- Dual volute design
- O-ring casing seal for ease of service & cleaning
- Maximum working pressure 75 PSI
- Maximum temperature 160°F
- Maximum flow 173 GPM
- Discharge pressure up to 44 PSI
- Solids handling up to 1/2” diameter
- Self-primes to 10’ in 1 minute
- Maximum suction lift 20’
- 5 1/2 HP Honda OHV engine with oil alert

NO-LEAD: The weighted average of the wetted surface of this no-lead product contacted by consumable water contains less than one quarter of one percent (0.25%) lead.

A.Y. McDonald Mfg. Co.
P.O. Box 508
Dubuque, IA 52004-0508

Toll Free: 1-800-292-2737
Fax: 1-800-832-9296
Hours: 7:00 a.m. - 5:00 p.m., CST

sales@aymcdonald.com
www.aymcdonald.com

A.Y. McDonald considers the information on this assembly drawing correct when published. Item and option availability, including specifications, are subject to change without notice.

Submitted by: