SUBMITTAL DATA SHEET

NL Angle Plug Style Meter Stop – 74602YT

T CTS Compression x Yoke Star Nut

MODEL	SIZE	A	B	C	D
74602YT	3/4 X 01	2.95	1.56	3/4	5/8
74602YT	1 X 01	3.21	1.81	1	5/8
74602YT	3/4 X 02	2.95	1.56	3/4	5/8 X 3/4, 3/4
74602YT	1 X 02	3.21	1.81	1	5/8 X 3/4, 3/4
74602YT	1 X 04	3.64	1.98	1	1
74602YT	1 1/4 X 04	3.73	2.07	1 1/4	1

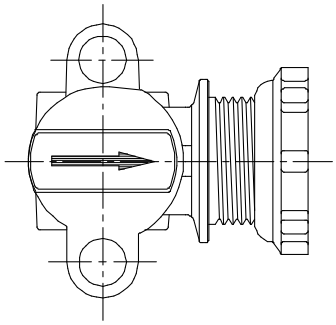

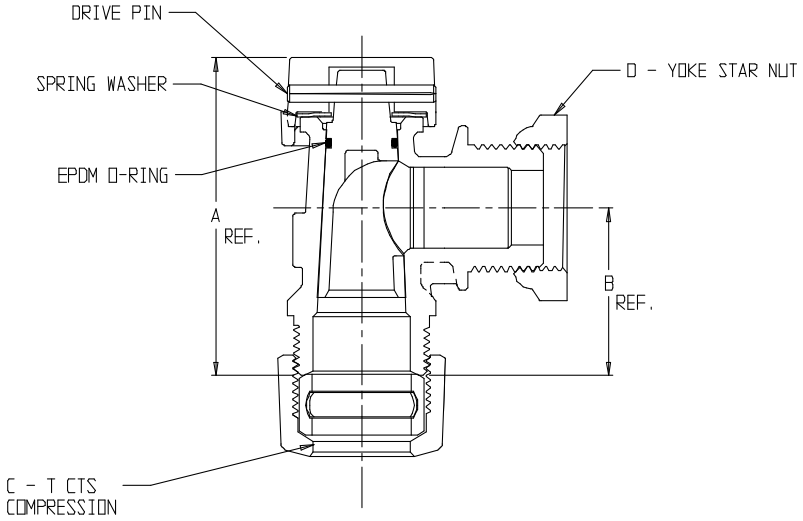

SUBMITTAL INFORMATION

- Manufactured in compliance with ANSI/AWWA C800 (latest revision)
- Brass components in contact with potable water conform to ASTM B584, UNS C89833 (latest revision) and identified with "NL"
- Certified to NSF/ANSI 61 and NSF/ANSI 372
- Brass components not in contact with potable water conform to ASTM B62 and ASTM B584, UNS C83600 -85-5-5-5 (latest revision)
- Large wrench flats provided for proper installation
- Rated for 100 PSIG water pressure
- Insert stiffeners required on all flexible plastic connections

A.Y. McDonald Mfg. Co.
P.O. Box 508
Dubuque, IA 52004-508

Toll Free: 1-800-292-2737
Fax: 1-800-832-9296
Hours: 7:00 a.m. – 5:00 p.m., CST

sales@aymcdonald.com
www.aymcdonald.com

A.Y. McDonald considers the information on this assembly drawing correct when published. Item and option availability, including specifications, are subject to change without notice.

Submitted by: