# SUBMITTAL DATA SHEET

## NL Iron Meter Yoke Expander – 714-4WEHG

Wrench Style Expander

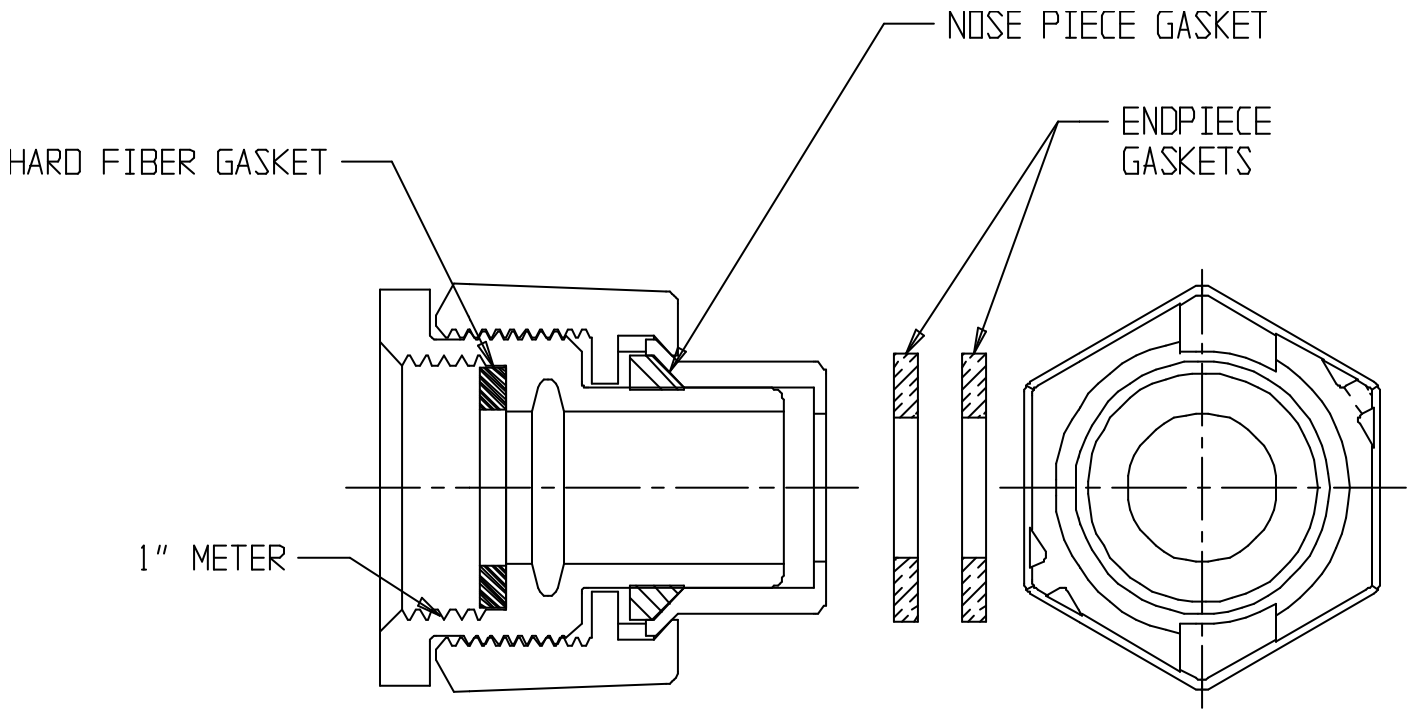


**SUBMITTAL INFORMATION**

- Manufactured in compliance with ANSI/AWWA C800 (latest revision)
- Brass components in contact with potable water conform to ASTM B584, UNS C89833 (latest revision) and identified with "NL"
- Certified to NSF/ANSI 61 and NSF/ANSI 372
- Brass components not in contact with potable water conform to ASTM B62 and ASTM B584, UNS C83600 -85-5-5-5 (latest revision)
- Large wrench flats provided for proper installation

**A.Y. McDonald Mfg. Co.**
P.O. Box 508
Dubuque, IA 52004-508

**Toll Free:** 1-800-292-2737
**Fax:** 1-800-832-9296
**Hours:** 7:00 a.m. – 5:00 p.m., CST

sales@aymcdonald.com
www.aymcdonald.com

A.Y. McDonald considers the information on this assembly drawing correct when published. Item and option availability, including specifications, are subject to change without notice.

**Submitted by:**