100-2P06-IA4

Powerhouse™ Pulleys

http://www.bbman.com/catalog/product/100-2P06-IA4

Product Number	100-2P06-IA4
Teeth	100
Tooth Style	GT 2mm
For Belt Width (mm)	6.000
Type	6I
Material	Aluminum
Finish	Clear Anodized
Bore Type	Finished Bore
Bore (in)	0.313
Pitch Diameter (in)	2.506
Outside Diameter (in)	2.486
Face Width (in)	0.375
Overall Length (in)	0.750
Hub Diameter (in)	1.000
Min. Bore (in)	0.313
Unit System	Inch
Number & Screw Size	1 x 6-32
Weight (lb)	0.24
Part Number Cross Reference	100-2P06-IA4, A 6D51-100DF0610,
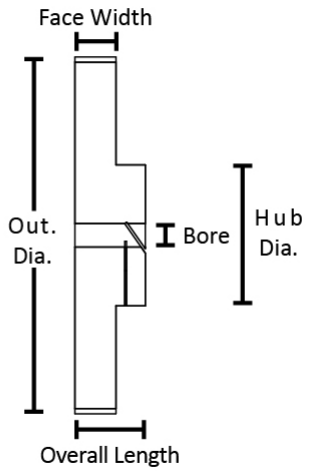
TYPE 6I