BII 2-1/2" DIAL PRESSURE GAUGE LOWER MOUNT

Application:

General purpose gauge, for potable water pumps & systems, these gauges are suitable for compressors, hydraulic presses, machinery, pneumatic equipment and motors, for most commercial air, water and steam services. To be used with fluid medium which does not clog connection or corrode copper alloy.
Not for use with oxygen, natural gas or propane.

NO LEAD <0.25% Pb by weighted avg.

Third Party Certified to NSF / ANSI 372

Certification:

NSF/ANSI Standard 372 Certified (No Lead Series Only)



GAUGE SPECIFICATIONS	
Standard	ASME B40.1
Dial	2-1/2" (63.5mm) white aluminum dial
Case	Steel
Lens	Acrylic
Ring (Bezel)	N/A
Connection	Brass / No Lead Brass
Bourdon Tube	Brass
Fill Liquid	N/A
Movement	Brass / No Lead Brass
Pointer	Aluminum (Anodized Black)
Welding	Tin Solder
Working Pressure	Maximum 75% of Full Scale Valve (F.S.V.)
Ambient Op. Temp.	-40°F to 140°F (-40°C to 60°C)
Media Op. Temp.	Max. 140°F (60°C)
Accuracy	3% - 2% - 3% Grade B
Enclosure Rating	General Purpose

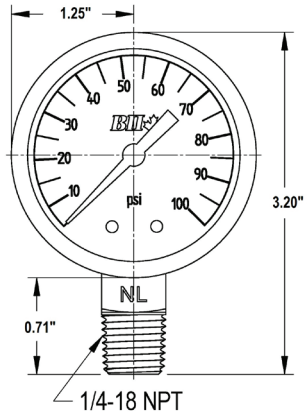

DIMENSIONS					
Part No.	No Lead Part No.	Connection	Range PSI	Increments	Weight grams
N/A	PG25-15NL	1/4" MPT	0-15	0.5	110
N/A	PG25-30NL	1/4" MPT	0-30	0.5	110
N/A	PG25-60NL	1/4" MPT	0-60	1	110
PG25-100	PG25-100NL	1/4" MPT	0-100	1	110
PG25-160	PG25-160NL	1/4" MPT	0-160	2	110
PG25-200	PG25-200NL	1/4" MPT	0-200	2	110
N/A	PG25-300NL	1/4" MPT	0-300	5	110
N/A	PG25-400NL	1/4" MPT	0-400	5	110
N/A	PG25-600NL	1/4" MPT	0-600	10	110
COMBINATION VACUUM / PRESSURE GAUGE					
PGC25-30-0-15	N/A	1/4" MPT	30Hg-0-15	0.5	110

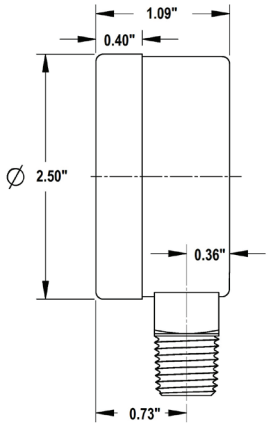

BOSHART INDUSTRIES
COMMITTED TO EXCELLENCE SINCE 1955

25 Whaley Avenue, PO Box 310, Milverton, ON CANADA N0K 1M0
Tel: 519-595-4444 Fax: 519-595-4380 Toll Free: 800-561-3164

www.boshart.com

© 2018 Boshart Industries Inc. All Rights Reserved.