0853(F)-NL & 0851P-NL SERIES NO LEAD BRASS SEDIMENT FAUCETS

SPECIFICATION:
- Threads conform to ANSI/ASME B1.20.1
- PEX ends conform to ASTM F-1807
- Hose thread outlet 3/4" GHT
- Max Pressure Rating: 125 PSI
- Max Temperature Rating: 212°F (100°C)
- Black cast hand wheel

CERTIFICATION:
- NSF/ANSI Standard 61 & 372 Certified
- CSA Standard B125.1 Certified

NO LEAD <0.25% Pb by weighted avg. | Third Party Certified to NSF / ANSI 372



MATERIAL LIST	
Part Name	**Material**
Wheel Nut	Steel
Name Plate	Aluminum
Hand Wheel	Cast Iron
Stem	No Lead Brass
Packing Nut	No Lead Brass
Gland Packing	Rubber (NBR)
Bonnet	No Lead Brass
Body	No Lead Brass
Seat Packing	Rubber (NBR)
Seat Packing Screw	No Lead Brass

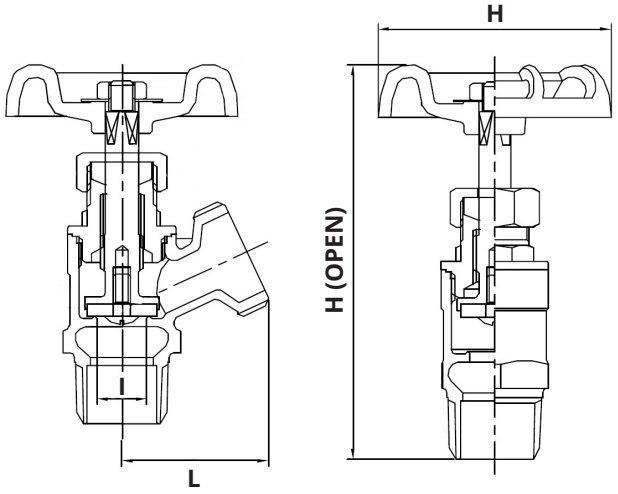

DIMENSIONS										
Part No.	**Description**	**I**		**H**		**L**		**H (OPEN)**		**Weight**
		inches	**mm**	**inches**	**mm**	**inches**	**mm**	**inches**	**mm**	**grams**
0853-05NL	1/2" MPT	0.45	11.40	2.13	54.00	3.59	91.00	1.58	40.00	241
0853-07NL	3/4" MPT	0.45	11.40	2.13	54.00	3.70	94.00	1.58	40.00	258
0853F-05NL	1/2" FPT	0.45	11.40	2.13	54.00	3.31	84.00	1.58	40.00	238
0853F-07NL	3/4" FPT	0.45	11.40	2.13	54.00	3.35	85.00	1.58	40.00	251
0851P-05NL	1/2" PEX	0.45	11.40	2.13	54.00	4.37	111.00	1.58	40.00	236

BOSHART INDUSTRIES

25 Whaley Avenue, PO Box 310, Milverton, ON CANADA N0K 1M0
Tel: 800-561-3164

boshart.com • blog.boshart.com

© 2020 Boshart Industries Inc. All Rights Reserved.