RESIDENTIAL PRODUCT POCKET CATALOG

Built to be the Best™

BRADFORD WHITE®
WATER HEATERS

BRADFORD WHITE®
WATER HEATERS
Ambler, PA

Committed to American Manufacturing and Professional Installation.

Bradford White Corporation Subsidiary Companies

LAARS Heating Systems Company
NST
BRADFORD WHITE WATER HEATERS

- **Sales Department**
  For questions regarding where to purchase water heaters or who your local Bradford White representative is, call:
  800-523-2931
- **24/7 Technical Support**
  For questions during and after installation, including sequence of operation, diagnosis, and repair assistance.
  Phone: 800-334-3393
  Email: techserv@bradfordwhite.com
- **Product Support**
  Pre-Installation support such as product sizing, performance, application, and clarification questions.
  Phone: 844-235-4958
  Email: products@bradfordwhite.com
- **24/7 Warranty Support**
  For questions regarding tank and/or parts warranty and limitations on warranties.
  Phone: 800-531-2111
  Email: warranty@bradfordwhite.com

To see Bradford White's complete line of products visit: www.bradfordwhite.com

© 2017, Bradford White Corporation. All Rights Reserved.

RPC-0617

© 2017, Bradford White Corporation. All Rights Reserved.

RPC-0617

Contents

Residential Water Heaters

GAS

Atmospheric Vent High EF 6/7
Atmospheric Vent Damper 8/9
Atmospheric Vent Models 10/11
Atmospheric Vent High Input 12/13
Direct Vent 14/15
High Efficiency eF Series® Power Vent 16/17
Power Vent (TTW®) 18/19
Power Direct Vent 20/21
Manufactured Home Closed Combustion/Direct Vent 22/23
Manufactured Home Atmospheric Combustion 24/25
Ultra Low NOx Atmospheric Vent Damper 26/27
Ultra Low NOx Atmospheric Vent 28/29
Ultra Low NOx Atmospheric Vent High Input 30/31
Ultra Low NOx TTW® Power Vent 32/33
Ultra Low NOx Power Direct Vent 34/35
Ultra Low NOx Direct Vent 36/37
Infiniti Tankless™ High Efficiency 38/39
Infiniti Tankless™ Mid Efficiency 40/41

ELECTRIC

General Information 42/43
AeroTherm™ Series Heat Pump 44/45
Upright Models 46/47
Lowboy Models 48/49
Wall Hung 50/51
Utility 52/53
Powerful Compact® 54/55
KwickShot® Instantaneous Water Heaters 56-59

SOLAR

EcoStor2™ Double-Wall Gas Backup 60/61
EcoStor2™ TTW® Power Vent Double-Wall Gas Backup 62/63
EcoStor™ Open Loop Gas Backup 64/65
EcoStor™ TTW® Power Vent Open Loop Gas Backup 66/67
EcoStor2™ SC Ultra Low NOx Double-Wall Gas Backup 68/69
EcoStor™ Dual Coil Heat Exchanger Backup 70/71
EcoStor™SC Single-Wall Electric Backup 72/73
EcoStor2™ Double-Wall Electric Backup Models 74/75
Solar Saver® Electric Backup 76/77

HYDRONIC SPACE HEATING

Combi1™ Single-Wall Atmospheric 78/79
Combi1™ TTW® Single-Wall Power Vent Models 80/81
Combi2™ Double-Wall Atmospheric Models 82/83
Combi2™ TTW® Double-Wall Power Vent 84/85

INDIRECTS

PowerStor Series® Single-Wall Indirect 86/87
PowerStor2™ Series Double-Wall Indirect 88/89
Powertor Series® SS Stainless Steel Single-Wall Indirect 90/91

STORAGE TANKS

Storage Tank 92/93

Warranty Information 94
Tank Type Serial Number Indentification 95

General Information About the Products in this Catalog

1. All Gas Water Heaters are design certified by CSA International (formerly AGA and CGA) in accordance with ANSI Z21.10.1 or 10.3 (latest addition). Closed Combustion Manufactured Home Water Heaters, are listed by Intertek (ETL).
2. All Electric Water Heaters are listed by Intertek (ETL).
3. All Residential Storage Models meet or exceed efficiency requirements of the Department of Energy. ASHRAE standard 90.1b (current standard) and the National Appliance Energy Conservation Act of 1987, recent amendment effective April 16, 2015 which supercedes all state and local efficiency requirements.
4. All Tank Type Water Heaters are certified at 300 PSI test pressure and 150 PSI working pressure (except where noted).
5. All Residential Water Connections are ¾" NPT on 8" centers (except where noted).
6. All Residential Gas Models have ½" NPT Gas Connections (except where noted).
7. All Residential Water Heaters come with a T&P Relief Valve included (except where noted).
8. MANUFACTURED UNDER ONE OR MORE OF THE FOLLOWING U.S. PATENTS: 5,682,666; 7,634,976; 5,660,165; 5,954,492; 6,056,542; 6,935,280; 5,372,185; 5,485,879; 5,574,822; 7,971,560; 7,992,526; 6,684,821; 6,442,178; 7,334,419; 7,866,168; 7,270,087; 7,007,748; 5,596,952; 6,142,216; 7,699,026; 5,341,770; 7,337,517; 7,665,211; 7,665,210; 7,063,132; 7,063,133; 7,559,293; 7,900,589; 5,943,984; 8,082,888; 5,988,117; 7,621,238; 7,650,859; 5,761,379; 7,409,925; 5,277,171; 8,146,772; 7,458,341; 2,262,174. OTHER U.S. AND FOREIGN PATENT APPLICATIONS PENDING. CURRENT CANADIAN PATENTS: 2,314,845; 2,504,824; 2,108,186; 2,143,031; 2,409,271; 2,548,958; 2,112,515; 2,476,685; 2,239,007; 2,092,105; 2,107,012.
9. All dimensions are in inches (unless otherwise noted). Dimensions and specifications subject to change without notice in accordance with our policy of continuous product improvement.
10. All products manufactured by Bradford White Water Heaters are designed, fabricated, and assembled in Middleville, MI. All raw materials and component parts are sourced from American companies for the highest level of American made content and manufacture, whenever possible.

Air-Conditioning, Heating, and Refrigeration Institute

American Society of Mechanical Engineers Heating Boilers

American Society of Mechanical Engineers Lined Potable Water Heaters

Compliance, Safety, Accountability

CSA International

Intertek

National Board of Boiler and Pressure Vessel Inspectors

Water Quality Association

Underwriters Laboratories

© 2017, Bradford White Corporation. All Rights Reserved.

INNOVATION AND RESOURCES

The Hydrojet® Total Performance System

The Hydrojet® Total Performance System helps reduce the accumulation of sediment buildup within the water heater resulting in better efficiency, longer tank life, more consistent temperatures, and a larger volume of hot water to meet your customer's needs.

Vitraglas®

Bradford White water heaters are lined with the exclusive Vitraglas® enamel to provide unsurpassed protection so your customer's water heater lasts longer.

The Defender Safety System® and Eco-Defender Safety System®

Designed for our gas-fired water heaters, the Defender Safety System® and Eco-Defender Safety System® helps protect families and their homes by resisting the ignition of flammable vapors from a spill outside the water heater. This technology gives them the peace-of-mind that their water heater will provide hot water safely and efficiently.

The ICON System™ Intelligent Gas Control Valve

The ICON System™ is an exclusive gas control technology that provides you with numerous performance and energy-saving benefits such as an enhanced First Hour Delivery ratings and tighter temperature differentials, Intelligent Diagnostics to assist in troubleshooting, and Pilot-On-Indication.

Phone Apps

Bradford White's RightSpec® Cross Reference, Warranty Check, and eF Series® Efficiency Calculator Apps are available for both Android™ and iOS platform devices. They are intuitive and easy-to-use and help save valuable time in the field. Visit Bradfordwhite.com for full details and download links.

© 2017, Bradford White Corporation. All Rights Reserved.

Residential Gas
Atmospheric Vent High EF Models

- ENERGY STAR® Qualified
- High Efficiency Blower
  - 10 ft. Power Cord Included (120 VAC)
- Bradford White ICON System™
  - Enhanced Performance
  - Advanced Temperature Control System
  - Intelligent Diagnostics
  - Separate Immersed Thermowell
- Defender Safety System® featuring the patented Advanced ScreenLok® Technology flame arrestor design
  - Flammable Vapor Sensor
  - Maintenance-Free
  - Sight Window
  - Pedestal Base
- Hydrojet® Total Performance System
- Vitraglas® Lining
- 2" Non-CFC Foam Insulation
- Water Connections—3⁄4" NPT true dielectric fittings
- Heat Traps
- Protective Magnesium Anode Rod
- 3"x4" "Snap Lock" Draft Diverter
- T&P Relief Valve
- Low Restrictive Brass Drain Valve

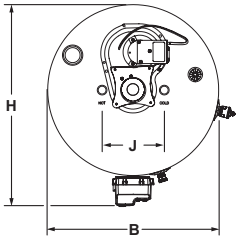

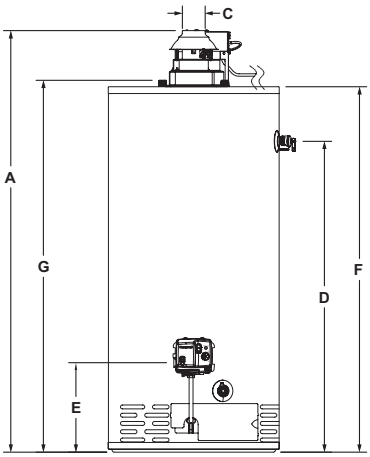

RG2F40S6N

Atmospheric Vent High EF Models

DIMENSIONS IN INCHES

Meet or exceed ASHRAE 90.1b (current standard) C.E.C. Listed
78% Recovery Efficiency

NATURAL GAS AND LIQUID PROPANE GAS MODELS						Recovery 90°F Rise*		A	B	C	D	E	F	G	H	J	
Model Number	Nominal Gal. Cap.	DOE Rated Storage Volume	Input BTU/Hr.	1st Hour Rating (Gal.)	Uniform Energy Factor	U.S. GPH	Imp. GPH	Floor to Flu Conn.	Jacket Dia.	Vent Size	Floor to T&P Conn.	Floor to Gas Conn.	Floor to Top of Heater	Floor to Water Conn.	Depth	C/L of Water Conns.	Approx. Shipping Weight (lbs)
★ RG2F40S6N	40	38	38,000	69	0.68	41	33	54 1/4	22	3 x 4	40	11 3/4	47	47 7/8	25 7/8	8	150
★ RG2F50S6N	50	48	38,000	81	0.71	41	33	55 1/4	24	3 x 4	40 5/8	11 3/4	48	48 7/8	27 7/8	8	176

Propane models feature a Titanium Stabilized Stainless Steel propane burner. For Propane (LP) models change suffix "N" to "X".
For 10 year models, change suffix from "6" to "10".
* Based on manufacturer's rated recovery efficiency.
120V, 60Hz. 1 Amp.
Uniform Energy Factor and First Hour Rating are based on the latest AHRI directory listings.
★ = ENERGY STAR® Qualified.

© 2017, Bradford White Corporation. All Rights Reserved.

Residential Gas
Atmospheric Vent Damper Models

- ENERGY STAR® Qualified—Some models
- Bradford White ICON System™
  - Enhanced Performance
  - Advanced Temperature Control System
  - Intelligent Diagnostics
  - Separate Immersed Thermowell
- Automatic Flue Damper
  - 10 ft. Power Cord Included (120 VAC)
- Defender Safety System® featuring the patented Advanced ScreenLok® Technology flame arrestor design
  - Flammable Vapor Sensor
  - Maintenance-Free
  - Sight Window
  - Pedestal Base
- Hydrojet® Total Performance System
- Vitraglas® Lining
- Non-CFC Foam Insulation
- Water Connections—3⁄4" NPT true dielectric fittings
- Heat Traps
- Protective Magnesium Anode Rod
- 3"x4" "Snap Lock" Draft Diverter
- T&P Relief Valve
- Low Restrictive Brass Drain Valve

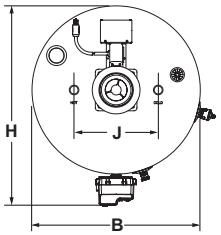

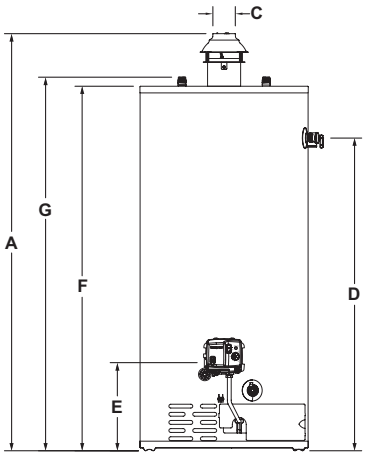

RG2D40S6N

Atmospheric Vent Damper Models

DIMENSIONS IN INCHES

Meet or exceed ASHRAE 90.1b (current standard) C.E.C. Listed
80% Recovery Efficiency

NATURAL GAS MODELS						Recovery 90°F Rise*		A	B	C	D	E	F	G	H	J	
Model Number	Nominal Gal. Cap.	DOE Rated Storage Volume	Input BTU/Hr.	1st Hour Rating (Gal.)	Uniform Energy Factor	Nat U.S. GPH	Nat Imp. GPH	Floor to Flue Conn.	Jacket Dia.	Vent Size	Floor to T&P Conn.	Floor to Gas Conn.	Floor to Top of Heater	Floor to Water Conn.	Depth	C/L of Water Conn.	Approx. Shipping Weight (lbs)
RG1D30T6N•	30	28	32,000	59	0.62	34	28	63	16	3 x 4	49 7/8	13	56 1/4	57	20 3/4	8	116
RG1D40S6N•	40	38	40,000	73	0.59	43	36	57 7/8	20	3 x 4	41	13	48	49 1/8	24 3/4	8	147
RG1D40T6N•	40	38	40,000	74	0.59	43	36	63 3/8	18	3 x 4	50 1/8	13	56 9/16	57 3/4	22 3/4	8	134
RG1D50T6N•	50	48	40,000	86	0.63	43	36	63 3/8	20	3 x 4	49 7/8	13	56 9/16	57 3/4	24 3/4	8	160
★ RG2D40S6N	40	38	38,000	71	0.65	41	34	54 1/2	22	3 x 4	40 7/8	11 3/4	47 11/16	48 7/8	26 1/8	11	155
★ RG2D50S6N	50	47	40,000	83	0.69	43	36	63 1/2	22	3 x 4	49 7/8	11 3/4	56 1/2	58	26 1/8	11	174

Propane models feature a Titanium Stabilized Stainless Steel propane burner. For Propane (LP) models change suffix "N" to "X".
For 10 year models, change suffix from "6" to "10".

* Based on manufacturer's rated recovery efficiency.
120V, 60Hz. 12 Amps.
Uniform Energy Factor and First Hour Rating are based on the latest AHRI directory listings.

★ = ENERGY STAR® Qualified.

• Models feature optional top T&P location and must be specified when ordering.

LP GAS MODELS	Input BTU/Hr.	Recovery 90°F Rise*	
Model Number		LP U.S. GPH	LP Imp. GPH
RG1D30T6X•	31,000	33	28
RG1D40S6X•	38,000	41	34
RG1D40T6X•	38,000	41	34
RG1D50T6X•	38,000	41	34
★ RG2D40S6X	38,000	41	34
★ RG2D50S6X	40,000	43	36

For above models please note recovery changes for LP.

© 2017, Bradford White Corporation. All Rights Reserved.

Residential Gas
Atmospheric Vent Models

10/11

- Bradford White ICON System™
  - Enhanced Performance
  - Advanced Temperature Control System
  - Intelligent Diagnostics
  - Separate Immersed Thermowell
- Defender Safety System® featuring the patented Advanced ScreenLok® Technology flame arrestor design
  - Resettable Thermal Switch
  - Maintenance-Free
  - Sight Window
  - Pedestal Base
- Hydrojet® Total Performance System
- Vitraglas® Lining
- Non-CFC Foam Insulation
- Water Connections—3⁄4" NPT true dielectric fittings
- Heat Traps
- Protective Magnesium Anode Rod
- 3"x4" "Snap Lock" Draft Diverter
- T&P Relief Valve
- Low Restrictive Brass Drain Valve

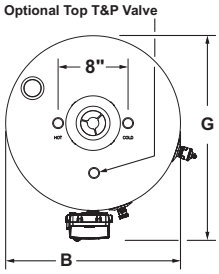

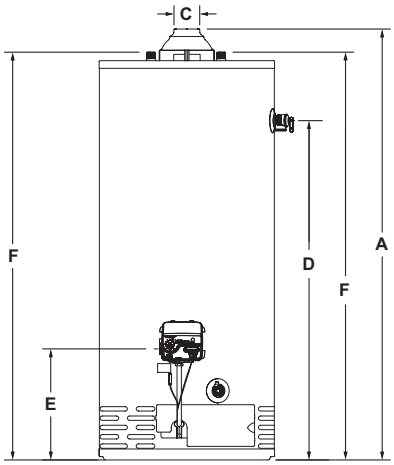

RG240T6N

Atmospheric Vent Models

DIMENSIONS IN INCHES

Meet or exceed ASHRAE 90.1b (current standard) C.E.C. Listed
79% Recovery Efficiency

NATURAL GAS MODELS						Recovery 90°F Rise*		A	B	C	D	E	F	G	
Model Number	Nominal Gal. Cap.	DOE Rated Storage Volume	Input BTU/Hr.	1st Hour Rating (Gal.)	Uniform Energy Factor	Nat U.S. GPH	Nat Imp. GPH	Floor to Flue Conn.	Jacket Dia.	Vent Size	Floor to T&P Conn.	Floor to Gas Conn.	Floor to Water Conn.	Depth	Approx. Shipping Weight (lbs)
RG130T6N•	30	28	27,000	53	0.60	29	24	59 1⁄8	16	3 x 4	49 3⁄4 / 56 3⁄8	13	57 1⁄2	19 1⁄2	109
RG230T6N•	30	28	32,000	59	0.61	34	28	59 3⁄4	18	3 x 4	49 7⁄8 / 56 3⁄8	13	57 1⁄8	21 1⁄2	116
RG230S6N	30	28	30,000	57	0.60	32	37	49 1⁄4	20	3 x 4	38 5⁄8	13	46 1⁄2	23 1⁄2	113
RG140T6N•	40	38	34,000	69	0.59	37	31	61 1⁄4	18	3 x 4	51 1⁄2 / 60	13	59 5⁄8	21 1⁄2	132
RG240T6N•	40	38	40,000	74	0.59	43	36	60 1⁄8	20	3 x 4	50 1⁄8 / 56 5⁄8	13	57 9⁄16	23 1⁄2	134
RG240S6N•	40	38	40,000	73	0.59	43	36	51 1⁄2	22	3 x 4	41 / 47 1⁄4	13	49 3⁄16	25 1⁄2	139
RG150T6N•	50	47	34,000	80	0.63	37	31	59 5⁄8	20	3 x 4	50 / 56 3⁄8	13	58	23 1⁄2	150
RG250T6N•	50	48	40,000	86	0.65	43	36	60 1⁄2	22	3 x 4	49 7⁄8 / 57	13	57 7⁄8	25 1⁄2	154
RG250L6N	48	47	40,000	85	0.63	43	36	51 5⁄8	24	3 x 4	40 5⁄8	13	49 3⁄8	27 1⁄2	170
RG250S6N•	50	47	50,000	89	0.63	54	45	60 1⁄2	22	4	49 7⁄8 / 57	13	58 3⁄16	25 1⁄2	167

Propane models feature a Titanium Stabilized Stainless Steel propane burner.
For Propane (LP) models change suffix "N" to "X".

For 10 year models, change suffix from "6" to "10".

* Based on manufacturer's rated recovery efficiency.

• Models feature optional top T&P location and must be specified when ordering.
Note: RG230S6N and RG250L6N do not have top T&P option.
Uniform Energy Factor and First Hour Rating are based on the latest AHRI directory listings.

For models to the right please note recovery changes for LP.

LP GAS MODELS	Input BTU/Hr.	Recovery 90°F Rise*	
Model Number		LP U.S. GPH	LP Imp. GPH
RG130T6X•	27,000	29	24
RG230T6X•	31,000	33	23
RG230S6X	32,000	32	27
RG140T6X•	34,000	37	31
RG240T6X•	36,000	34	33
RG240S6X•	35,000	41	34
RG150T6X•	34,000	37	31
RG250L6X	35,000	41	34
RG250T6X•	35,000	41	34
RG250S6X•	48,000	52	45

© 2017, Bradford White Corporation. All Rights Reserved.

Residential Gas

12/13

Atmospheric Vent High Input Models

All Model Features (except RG155H6N):

- Bradford White ICON System™
  - Enhanced Performance
  - Advanced Temperature Control System
  - Intelligent Diagnostics
  - Separate Immersed Thermowell

All Model Features:

- Hydrojet 2™ Total Performance System
- Vitraglas® Lining
- Side Connections—3/4" (19mm)
- Non-CFC Foam Insulation
- Pedestal Base (RG250H6N / RG275H6N only)
- Water Connections
- Hand Hole Cleanout (RG2100H6N only)
- Protective Magnesium Anode Rod
- 4" (107mm) "Snap Lock" Draft Diverter
- T&P Relief Valve
- Low Restrictive Brass Drain Valve
- Thermostatic Mixing Valve (ASSE Approved)—Included with RG155H6N only

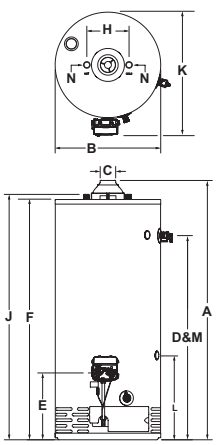

RG250H6N / RG275H6N

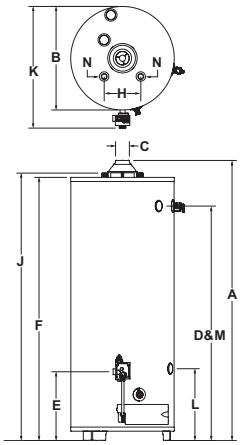

RG155H6N

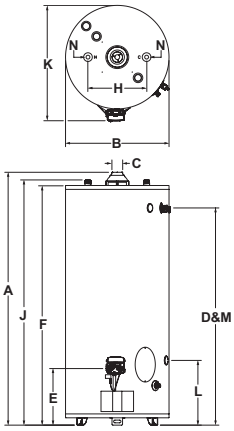

RG2100H6N

RG2100H6N

Atmospheric Vent High Input Models

Meet or exceed ASHRAE 90.1b (current standard) C.E.C. Listed

DIMENSIONS IN INCHES

NATURAL GAS MODELS						Recovery 90°F Rise*		A	B	C	D	E	F	H	J	K	L	M	N	
Model Number	Nominal Gal. Cap.	DOE Rated Storage Volume	Input BTU/Hr.	1st Hour Rating (Gal.)	Uniform Energy Factor	Nat U.S. GPH	Nat Imp. GPH	Floor to Flue Conn.	Jacket Dia.	Vent Size	Floor to T&P Conn.	Floor to Gas Conn.	Floor to Top of Heater	C/L of Water Conn.	Floor to Water Conn.	Depth	Floor to Space Heating Inlet	Floor to Space Heating Outlet	NPT	Approx. Shipping Weight (lbs)
RG250H6N	48	46	65,000	104	0.63	70	58	60	22	4	49 15/16	13	56 5/8	11	57 7/8	26	13 1/2	49 15/16	3/4	189
RG155H6N	55	55	80,000	117	0.61	86	72	59 1/2	22	4	49 7/8	14 13/16	55 15/16	8	57 7/8	25 7/8	15 7/16	49 7/8	3/4	210
RG275H6N	75	72	76,000	126	0.59	82	68	62 5/8	26	4	51 7/8	15	59	11	60 7/16	27 1/4	16 5/8	51 7/8	1	249
RG2100H6N	100	95	85,000	137	0.57	92	77	71 1/2	28 1/4	4	59 5/16	15 7/16	65 1/2	16	66 15/16	31 1/2	17 11/16	50 5/8	1 1/4	413

* Based on manufacturer's rated recovery efficiency.

Propane models feature a Titanium Stabilized Stainless Steel propane burner. For Propane (LP) models change suffix "N" to "X".

For 10 year models, change suffix from "6" to "10". RG155H6N not available as 10 year model. RG2100H6N model features hand hole cleanout.

Uniform Energy Factor and First Hour Rating are based on the latest AHRI directory listings.

LP GAS MODELS	Input BTU/Hr.	Recovery 90°F Rise*	
Model Number		LP U.S. GPH	LP Imp. GPH
RG250H6X	61,000	66	55
RG155H6X	78,000	84	70
RG275H6X	76,000	82	68
RG2100H6X	88,000	95	79

For above models please note recovery changes for LP.

© 2017, Bradford White Corporation. All Rights Reserved.

Residential Gas
Direct Vent Models

14/15

- Bradford White ICON System™
  - Enhanced Performance
  - Advanced Temperature Control System
  - Intelligent Diagnostics
  - Separate Immersed Thermowell
- Defender Safety System® featuring the patented Advanced ScreenLok® Technology flame arrestor design
  - Resettable Thermal Switch
  - Maintenance-Free
  - Sight Window
  - Pedestal Base
- Closed Combustion
- Reinforced Seals
- Maintenance-Free
- Sight Window
- Hydrojet® Total Performance System
- Vitraglas® Lining
- Cast Aluminum Air Intake Boot
- Telescoping Solid Vent Kits
- Flexible Vent Kit
- Side Connections—3/4" NPT tappings (RG2DV50H6N only)
- 2" Non-CFC Foam Insulation
- Water Connections—3/4" NPT—True dielectric fittings
- Heat Traps
- Protective Magnesium Anode Rod
- T&P Relief Valve
- Low Restrictive Brass Drain Valve

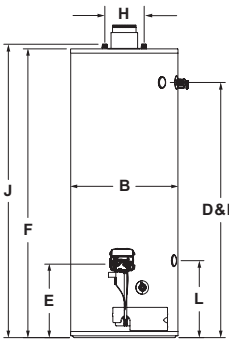

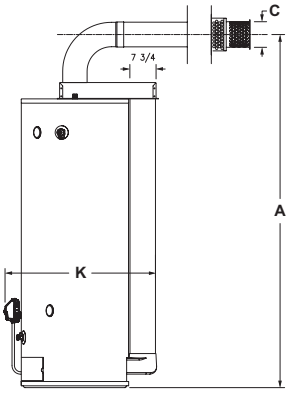

Telescoping Solid Vent Kit (Side View)

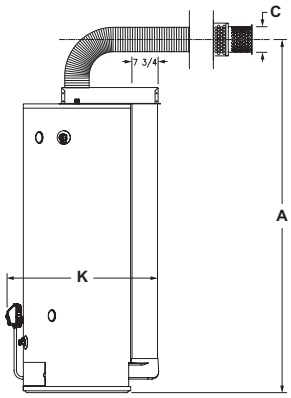

Flexible Vent Kit (Side View)

RG2DV50H6N

Direct Vent Models

DIMENSIONS IN INCHES

Meet or exceed ASHRAE 90.1b (current standard) C.E.C. Listed
78% Recovery Efficiency

NATURAL GAS MODELS						Recovery 90°F Rise*		A	B	C		D	E	F	H	J	K	L	M	
Model Number	Nominal Gal. Cap.	DOE Rated Storage Volume	Input BTU/Hr.	1st Hour Rating (Gal.)	Uniform Energy Factor	U.S. GPH	Imp. GPH	Floor to C/L of Vent	Jacket Dia.	Vent Size I.D.	O.D.	Floor to T&P Conn.	Floor to Gas Conn.	Floor to Top of Heater	C/L of Water Conn.	Floor to Water Conn.	Depth	Floor to Space Heating Inlet	Floor to Space Heating Outlet	Approx. Shipping Weight (lbs)
RG2DV40S6N	40	38	38,000	72	0.59	41	34	63 1/2 min.	22	3	5	43 3/8	15	50 3/16	8	51 1/8	31	—	—	189
RG2DV50S6N	50	47	42,000	85	0.63	45	35	72 1/2 min.	22	3	5	52 1/4	15	59 3/16	11	60 1/8	31	—	—	212
RG2DV50H6N	48	46	50,000	89	0.63	54	45	75 7/8 min.	22	4	6	52 1/4	15	59 1/8	8	60 1/8	31	15 3/4	52 1/4	234

All Propane models feature a Titanium Stabilized Stainless Steel propane burner. For Propane (LP) models change suffix "N" to "X".

For 10 year models, change suffix from "6" to "10". *Based on manufacturer's rated recovery efficiency.

Uniform Energy Factor and First Hour Rating are based on the latest AHRI directory listings.

RG2DV40S6N / RG2DV50S6N Solid Vent Kit: Part No. 239-51283-00. **RG2DV40S6N / RG2DV50S6N Flexible Vent Kit:** Part No. 239-51284-00.
RG2DV50H6N Solid Vent Kit: Part No. 239-51286-00. **RG2DV50H6N Flexible Vent Kit:** Part No. 239-51287-00.
Kits can be ordered and shipped with water heater, or ordered and shipped separately. For vent kit components and venting instructions, refer to Installation and Operation Manual.

RG2DV40S6N / RG2DV50S6N Optional Telescoping Solid Vent Kits:

Kit "A"	Telescopes from 4 3/4" to 5 11/16"	Part No. 239-41260-00
Kit "B"	Telescopes from 6 1/2" to 9 3/16"	Part No. 239-41331-00
Kit "C"	Telescopes from 13 3/4" to 23 11/16"	Part No. 239-41029-00
Kit "D"	Telescopes from 49 13/16" to 95 13/16"	Part No. 239-41424-00

RG2DV50H6N Optional Telescoping Solid Vent Kits:

Kit "F"	Telescopes from 4 3/4" to 5 11/16"	Part No. 239-42516-00
Kit "G"	Telescopes from 6 1/2" to 9 3/16"	Part No. 239-42517-00
Kit "H"	Telescopes from 13 3/4" to 23 11/16"	Part No. 239-42514-00
Kit "I"	Telescopes from 49 13/16" to 95 13/16"	Part No. 239-42512-00

LP GAS MODELS	Input BTU/Hr.	Recovery 90°F Rise*	
Model Number		U.S. GPH	Imp. GPH
RG2DV40S6X	36,000	39	32
RG2DV50S6X	40,000	43	36
RG2DV50H6X	48,000	50	42

For above models please note recovery changes for LP.

© 2017, Bradford White Corporation. All Rights Reserved.

Residential Gas

16/17

High Efficiency eF Series® Power Vent Model 90%+ Thermal Efficiency

- Vertical, Dual-pass Heat Exchanger System
- Vitraglas® Protection—On both primary and secondary heat exchanger
- Self-priming Condensate Tee
- Power Vent
- Horizontal and Vertical Venting
- Bradford White ICON System™
  - Enhanced Performance
  - Advanced Temperature Control System
  - Intelligent Diagnostics
  - Separate Immersed Thermowell
- Hydrojet® Total Performance System
- Vitraglas® Lining
- 2" Non-CFC Foam Insulation
- Pedestal Base
- Water Connections—3/4" NPT
- 3/4" NPT Side Connections.
- Heat Traps
- Two Protective Anode Rods
- T&P Relief Valve
- Low Restrictive Brass Drain Valve

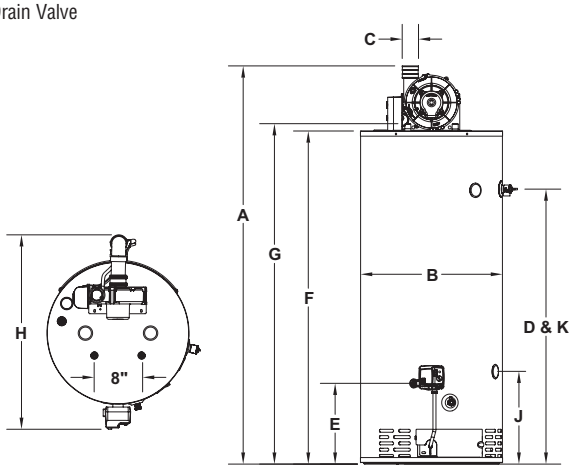

RC2PV50H6N

High Efficiency eF Series® Power Vent Model 90%+ Thermal Efficiency

DIMENSIONS IN INCHES

Meet or exceed ASHRAE 90.1b (current standard) C.E.C. Listed

NATURAL GAS AND LIQUID PROPANE GAS MODELS						Recovery 90°F Rise*		A	B	C	D	E	F	G	H	J	K	
Model Number	Nominal Gal. Cap.	DOE Rated Storage Volume	Input BTU/Hr.	1st Hour Rating (Gal.)	Uniform Energy Factor	U.S. GPH	Nat Imp. GPH	Floor to Vent Conn.	Jacket Dia.	Vent Size	Floor to T&P Conn.	Floor to Gas Conn.	Floor to Top of Heater	Floor to Water Conn.	Depth	Floor to Space Heating nlet	Floor to Space Heating Outlet	Approx. Shipping Weight (lbs)
RC2PV50H6N	50	49	76,000	131	0.79	93	77	67 1/4	24	2, 3 or 4	46 1/2	13 5/8	56 1/4	57 1/2	27 3/8	15 5/8	46 1/2	225

RC2PV50H6N		2" Vent Pipe	3" Vent Pipe	4" Vent Pipe
Max. Equivalent Length		†50 ft.	†120 ft.	†180 ft.
Min. Equivalent Length		7 ft.	15 ft.	15 ft.
Number	1	45 ft.	115 ft.	175 ft.
of	2	40 ft.	110 ft.	170 ft.
90° Elbows	3	35 ft.	105 ft.	165 ft.

Subtract 5ft. for each additional 90° elbow.

† For high altitude installations, consult the installation instructions.

© 2017, Bradford White Corporation. All Rights Reserved.

18/19

Residential Gas
Power Vent (TTW®) Models

- ENERGY STAR® Qualified—Some models
- Bradford White ICON System™
  - Enhanced Performance
  - Advanced Temperature Control System
  - Intelligent Diagnostics
  - Separate Immersed Thermowell
- Power Vented Water Heater
- Powerful Blower Motor
  - 10 ft. Power Cord Included (120 VAC)
- Horizontal and Vertical Venting
- Defender Safety System® featuring the patented advanced ScreenLok® Technology flame arrestor design (except models above 75,000 BTU/Hr.)
  - Flammable Vapor Sensor
  - Maintenance-Free
  - Sight Window
  - Pedestal Base
- Hydrojet® Total Performance System
- Vitraglas® Lining
- Non-CFC Foam Insulation
- Water Connections—3/4" NPT
- 3/4" NPT Side Connections (RG2PV50H6N, RG1PV55H6N, and RG2PV75H6N only)
- Heat Traps
- Protective Magnesium Rod (RG1PV55H6N has two)
- T&P Relief Valve
- Low Restrictive Brass Drain Valve
- Thermostatic Mixing Valve (ASSE Approved) —Included with RG1PV55H6N only

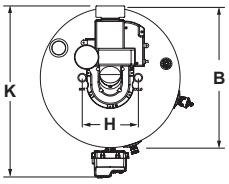

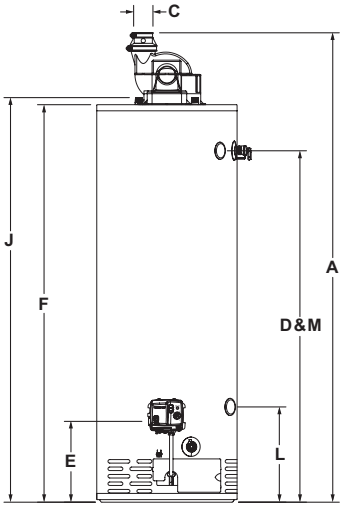

RG2PV50H6N

Power Vent (TTW®) Models

DIMENSIONS IN INCHES

Meet or exceed ASHRAE 90.1b (current standard) C.E.C. Listed
80% Recovery Efficiency

NATURAL GAS MODELS						Recovery 90°F Rise*		A	B	C	D	E	F	H	J	K	L	M	
Model Number	Nominal Gal. Cap.	DOE Rated Storage Volume	Input BTU/Hr.	1st Hour Rating (Gal.)	Uniform Energy Factor	Nat U.S. GPH	Nat Imp. GPH	Floor to Vent Conn.	Jacket Dia.	Vent Size	Floor to T&P Conn.	Floo to Gas Conn.	Floor to Top of Heater	C/L of Water Conn.	Floor to Water Conn.	Depth	Floor to Space Heating Inlet	Floor to Space Heating Outlet	Approx. Shipping Weight (lbs)
RG1PV40S6N	40	38	40,000	71	0.63	43	36	57 5/16	20	2 or 3	40	11 3/4	47 1/2	8	49	27 7/8	N/A	N/A	140
RG1PV50S6N	50	48	40,000	83	0.67	43	36	58 1/4	22	2 or 3	40 5/8	11 3/4	48 1/4	8	50 1/2	26 3/4	N/A	N/A	166
★ RG2PV40S6N	40	38	40,000	71	0.64	43	36	57 5/16	22	2 or 3	40	11 3/4	47 1/2	8	49	26 3/4	N/A	N/A	142
★ RG2PV50S6N	50	48	40,000	83	0.69	43	36	58 1/4	24	2 or 3	40 5/8	11 3/4	48 1/4	8	50 1/2	28 3/4	N/A	N/A	168
★ RG2PV40T6N	40	38	40,000	71	0.68	43	36	66 7/8	20	2 or 3	50	11 3/4	56 3/4	8	58	24 1/2	N/A	N/A	146
★ RG2PV50T6N	50	48	40,000	83	0.71	43	36	66 7/8	22	2 or 3	50	11 3/4	56 3/4	8	58	26 1/2	N/A	N/A	173
★ RG2PV50H6N	48	46	65,000	106	0.71	70	58	66 1/8	22	3 or 4	50 1/8	11 3/4	56 3/8	11	57 3/4	26 3/4	13 1/2	50 1/8	187
RG1PV55H6N	55	55	78,000	117	0.61	84	70	64 3/16	22	3 or 4	47 15/16	11 1/2	54 5/8	8	56	26 1/2	13 3/8	47 15/16	219
RG2PV75H6N	75	72	76,000	126	0.59	82	68	69 7/16	26	3 or 4	51 1/2	13 1/2	59 1/2	11	60 3/4	30 1/4	13 3/8	51 1/2	260

Propane models feature a Titanium Stabilized Stainless Steel propane burner. For Propane (LP) models change suffix "N" to "X". For 10 year models, change suffix from "6" to "10". RG1PV55H6N not available as 10 year model.*Based on manufacturer's rated recovery efficiency. 120 VAC Required for Power Venting / 120 VAC 60HZ 3.1 Amperes.

Uniform Energy Factor and First Hour Rating are based on the latest AHRI directory listings.

★ = ENERGY STAR® Qualified.

		2" Vent Pipe	3" Vent Pipe	3" Vent Pipe	4" Vent Pipe
		RG1PV40S6N RG1PV50S6N RG2PV40S6N RG2PV50S6N RG2PV40T6N RG2PV50T6N		RG2PV50H6N RG1PV55H6N RG2PV75H6N	
Max. Equivalent Length		†50 ft.	†120 ft.	†60 ft.	†180 ft.
Min. Equivalent Length		7 ft.	15 ft.	7 ft.	15 ft.
Number of 90° Elbows	1	45 ft.	115 ft.	55 ft.	175 ft.
	2	40 ft.	110 ft.	50 ft.	170 ft.
	3	35 ft.	105 ft.	45 ft.	165 ft.

† For high altitude installations, consult the installation instructions.

LP GAS MODELS	Input BTU/Hr.	Recovery 90°F Rise*	
Model Number		LP U.S. GPH	LP Imp. GPH
RG1PV40S6X	38,000	41	34
RG1PV50S6X	38,000	41	34
★ RG2PV40S6X	38,000	41	34
★ RG2PV50S6X	38,000	41	34
★ RG2PV40T6X	40,000	43	36
★ RG2PV50T6X	40,000	43	36
★ RG2PV50H6X	58,000	62	52
RG1PV55H6X	78,000	84	70
RG2PV75H6X	75,500	81	67

For above models please note recovery changes for LP.

© 2017, Bradford White Corporation. All Rights Reserved.

Residential Gas
Power Direct Vent Models

- ENERGY STAR® Qualified— Some models
- Bradford White ICON System™
  - Enhanced Performance
  - Advanced Temperature Control System
  - Intelligent Diagnostics
  - Separate Immersed Thermowell
- Defender Safety System®
  - Flammable Vapor Sensor
  - Maintenance-Free
  - Sight Window
  - Pedestal Base
- Closed Combustion Venting System
- Powerful Blower Model
  - 10 ft. Power Cord Included (120 VAC)
- Cast Aluminum Air Intake Boot
- Horizontal and Vertical Venting
- Optional Concentric Vent Kit Termination
- Flammable Vapor Sensor (except RG2PDV75)
- Hydrojet® Total Performance System
- Vitraglas® Lining
- 2" Non-CFC Foam Insulation
- Water Connections— 3/4" NPT
- Side Connections— 3/4" NPT (RG2PDV50H6N and RG2PDV75H6N only)
- Heat Traps
- Protective Magnesium Anode Rod
- T&P Relief Valve
- Low Restrictive Brass Drain Valve

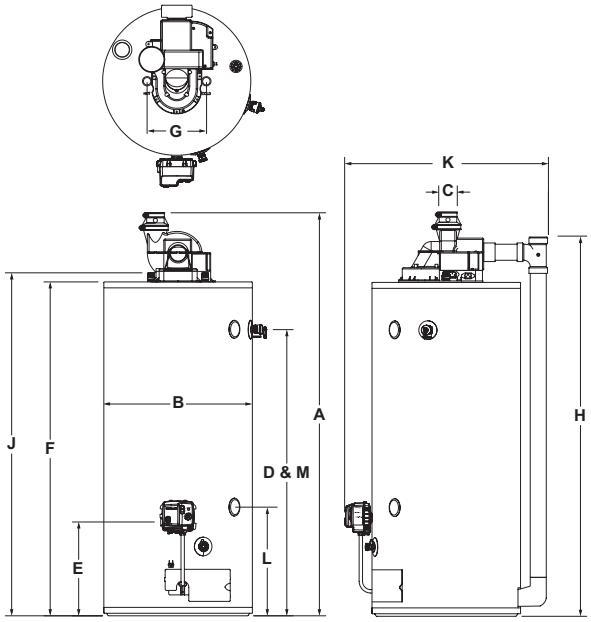

RG2PDV40S6N

Power Direct Vent Models

DIMENSIONS IN INCHES

Meet or exceed ASHRAE 90.1b (current standard) C.E.C. Listed
78% Recovery Efficiency

NATURAL GAS MODELS						Recovery 90°F Rise*		A	B	C	D	E	F	G	H	J	K	L	M	
Model Number	Nominal Gal. Cap.	DOE Rated Storage Volume	Input BTU/Hr.	1st Hour Rating (Gal.)	Uniform Energy Factor	Nat U.S. GPH	Nat Imp. GPH	Floor to Exhaust Outlet	Jacket Dia.	Vent Size	Floor to T&P Conn.	Floor to Gas Conn.	Floor to Top of Heater	C/L of Water Conn.	Floor to Air Intake	Floor to Water Conn.	Depth	Floor to Space Heating Inlet	Floor to Space Heating Outlet	Approx. Shipping Weight (lbs)
★ RG2PDV40S6N	40	38	40,000	71	0.68	43	36	59 11/16	22	2 or 3	42 1/2	14	49 1/2	8	59 3/8	50 13/16	30 1/2	—	—	161
★ RG2PDV50S6N	50	48	40,000	83	0.71	43	36	60 7/8	24	2 or 3	43 1/2	14	50 1/2	8	60 3/8	51 13/16	32 1/2	—	—	192
★ RG2PDV50H6N	48	46	60,000	95	0.69	65	54	69	22	3 or 4	52 1/4	13 5/8	58 3/4	11	67	60	30 5/8	15 3/4	52 1/4	204
RG2PDV75H6N	75	72	80,000	126	0.59	86	72	68 1/4	26	3 or 4	51 1/2	14	59 7/8	11	70	61 1/4	35	16 7/8	51 1/2	291

Propane models feature a Titanium Stabilized Stainless Steel propane burner. For Propane (LP) models change suffix "N" to "X".

For 10 year model, change suffix "6" to "10".

* Based on manufacturer's rated recovery efficiency.

120 VAC Required for Power Venting / 120 VAC, 60HZ, 3.1 Amperes.

Uniform Energy Factor and First Hour Rating are based on the latest AHRI directory listings.

★ = ENERGY STAR® Qualified.

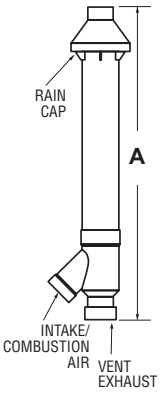

		2" Vent Pipe	3" Vent Pipe		4" Vent Pipe
		RG2PDV40S6N RG2PDV50S6N	RG2PDV40S6N RG2PDV50S6N	RG2PDV50H6N RG2PDV75H6N	RG2PDV50H6N RG2PDV75H6N
Max. Intake Length		35 ft.	85 ft.	60 ft.	100 ft.
Max. Exhaust Length		35 ft.	85 ft.	60 ft.	100 ft.
Min. Vent Length		7 ft.	7 ft.	7 ft.	7 ft.
Number	1	30 ft.	80 ft.	55 ft.	95 ft.
of	2	25 ft.	75 ft.	50 ft.	90 ft.
90° Elbows	3	20 ft.	70 ft.	45 ft.	85 ft.

Concentric Vent Kit Termination

2" Kit	A (in.)
P/N 239-44069-02	29 1/4
3" Kit	**A (in.)**
P/N 239-44069-01	36 1/4

LP GAS MODELS	Input BTU/Hr.	Recovery 90°F Rise*	
Model Number		LP U.S. GPH	LP Imp. GPH
★ RG2PDV40S6X	38,000	41	34
★ RG2PDV50S6X	38,000	41	34
★ RG2PDV50H6X	60,000	65	54
RG2PDV75H6X	78,000	84	70

For above models please note recovery changes for LP.

© 2017, Bradford White Corporation. All Rights Reserved.

Residential Gas

22/23

Manufactured Home Closed Combustion/Direct Vent Models

- Housing and Urban Development
- Sealed Combustion Roof Jack Kit—Must order for new installations
- Flue Baffle
- Heat Traps
- Vitraglas® Lining
- Fully Automatic Controls
- 2" Non-CFC Foam Insulation
- Water Connections—3⁄4" NPT
- Protective Magnesium Anode Rod
- T&P Relief Valve
- Low Restrictive Brass Drain Valve
- Convertible Gas Control

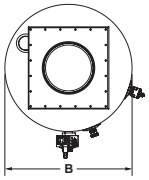

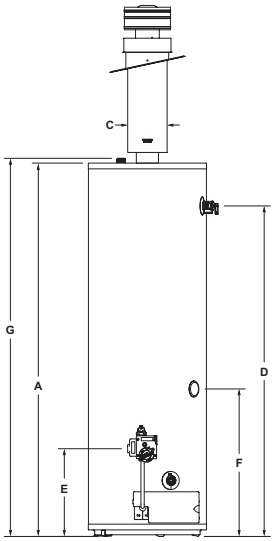

RG2DVMH30T6X

Manufactured Home Closed Combustion/Direct Vent Models

DIMENSIONS IN INCHES

Meet or exceed ASHRAE 90.1b (current standard) C.E.C. Listed
79% Recovery Efficiency

NATURAL GAS AND LIQUID PROPANE GAS MODELS						Recovery 90°F Rise*		A	B	C	D	E	F	G	
Model Number	Nominal Gal. Cap.	DOE Rated Storage Volume	Input BTU/Hr.	1st Hour Rating (Gal.)	Uniform Energy Factor	U.S. GPH	Imp. GPH	Floor to Top of Heater	Jacket Dia.	Vent Size	Floor to T&P Conn.	Floor to Gas Conn.	Floor to Cold Water Conn.	Floor to Hot Water Conn.	Approx. Shipping Weight (lbs)
RG2DVMH3OT6X	30	29	30,000	53	0.60	32	27	57 9⁄16	18	3	50 1⁄4	13 3⁄4	22 1⁄2	57 1⁄2	119
RG2DVMH4OT6X	40	37	30,000	60	0.59	32	27	57 1⁄4	20	3	50 1⁄2	13 3⁄4	22 1⁄2	58	139

To order Natural Gas heaters change “X” to “N”. For 10 year models, change suffix from “6” to “10”.

* Based on manufacturer’s rated recovery efficiency.

Uniform Energy Factor and First Hour Rating are based on the latest AHRI directory listings.

Optional Roof Jack Kits

Part Number	A	B	Through The Roof Clearance
239-37022-01	15"	16"- 33"	12"
239-37022-02	33 1⁄2"	33 1⁄2"- 66"	18" / 32"
239-37022-03	32 1⁄2"- 62 1⁄2"	37 1⁄2"- 74"	32" / 60"
239-37022-04	50"- 98 1⁄2"	54 1⁄2"- 109 1⁄2"	48" / 90"

Includes: roof jack, hardware, air intake, instructions.

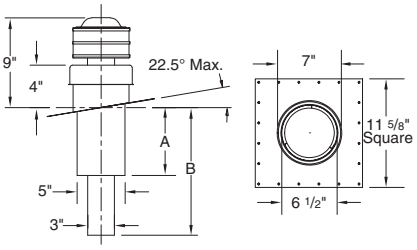

This water heater is of the closed combustion type (direct venting) for mobile home applications only, where all combustion air is supplied from the outdoors through the air intake and all combusted gas products are vented directly to the outside by means of the roof jack. No draft diverter (vent hood) is required for this water heater. The ETL listing of this water heater includes the field installation of the following components: roof jack, roof jack clamp, air intake, air intake seal, and heater tie down materials. These components for field installation are shipped with the heater in a separate box and must be installed according to instructions. No other components are approved for use with the water heater. The water heater must be installed in accordance with The Federal Mobile Home Construction and Safety Standard or in the absence of such standard, The Standard for Mobile Homes (ANSI/NFPA No. 601B-1977)

© 2017, Bradford White Corporation. All Rights Reserved.

Residential Gas

Manufactured Home Atmospheric Combustion Models

- Defender Safety System® featuring the patented Advanced ScreenLok® Technology flame arrestor design
  - Resettable Thermal Switch
  - Maintenance-Free
  - Sight Window
  - Pedestal Base
- Piezo Igniter
- Housing and Urban Development
- Roof Jack Kit—Must order for new installations
- Vitraglas® Lining
- Fully Automatic Controls
- Convertible Gas Control
- 2" Non-CFC Foam Insulation
- Water Connections—3⁄4" NPT
- Heat Trap
- Protective Magnesium Anode Rod
- 3"x4" "Snap Lock" Draft Diverter
- Flue Baffle
- Steel Tank
- T&P Relief Valve
- Low Restrictive Brass Drain Valve
- Design Certified by CSA International (formerly AGA/CGA).

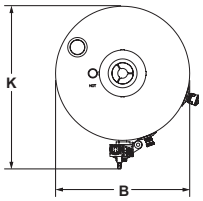

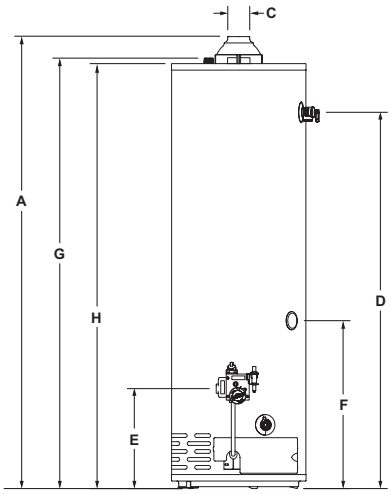

RG2MH30T6X

Manufactured Home Atmospheric Combustion Models

DIMENSIONS IN INCHES

Meet or exceed ASHRAE 90.1b (current standard) C.E.C. Listed
77% Recovery Efficiency

NATURAL GAS AND LIQUID PROPANE GAS MODELS						Recovery 90°F Rise*		A	B	C	D	E	F	G	H	K	
Model Number	Nominal Gal. Cap.	DOE Rated Storage Volume	Input BTU/Hr.	1st Hour Rating (Gal.)	Uniform Energy Factor	U.S. GPH	Imp. GPH	Floor to Flue Conn.	Jacket Dia.	Vent Size	Floor to T&P Conn.	Floor to Cold Water Conn.	Floor to Hot Water Conn.	Floor to Heater Top	Floor to Heater Top	Depth	Approx. Shipping Weight (lbs)
RG2MH30T6X	30	29	32,000	56	0.60	34	28	59 1/8	18	3 x 4	50 5/16	13	22 1/2	57 3/4	56 7/8	20	118
RG2MH40T6X	40	37	34,000	58	0.60	37	31	59 3/8	20	3 x 4	50 5/16	13	22 1/2	57 3/4	56 7/8	22	135

To order Natural Gas heaters change "X" to "N". For 10 year models, change suffix from "6" to "10".

* Based on manufacturer's rated recovery efficiency.

Uniform Energy Factor and First Hour Rating are based on the latest AHRI directory listings.

Optional Roof Jack Kits

Part Number	A	B	Through The Roof Clearance
239-37030-01	15"	16"- 33"	12"
239-37030-02	33 1/2"	33 1/2"- 66"	18" / 32"
239-37030-03	32 1/2"- 62 1/2"	37 1/2"- 74"	32" / 60"
239-37030-04	50"- 98 1/2"	54 1/2"- 109 1/2"	48" / 90"

Includes: roof jack, hardware, air intake, instructions.

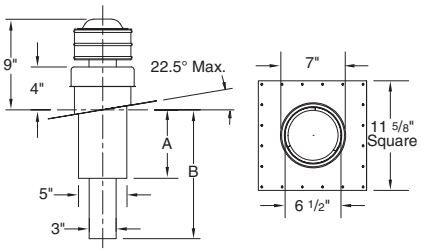

The water heater enclosure access door must be on the outside wall of the manufactured home (mobile home) only. Access to the water heater enclosure from the inside of the manufactured home (mobile home) is not permitted. The CSA International (formerly AGA/CGA) listing of this water heater includes the field installation of the following components: roof jack and heater tie down materials. These components for field installation are shipped in a separate box from the heater and must be installed according to instructions. No other components are approved for use with the water heater. The water heater must be installed in accordance with The Federal Manufactured Home Construction and Safety Standard Title 24 CRF, Part 3280.

© 2017, Bradford White Corporation. All Rights Reserved.

Residential Gas

Ultra Low NOx Atmospheric Vent Damper Models

- Bradford White ICON System™
  - Enhanced Performance
  - Advanced Temperature Control
  - Intelligent Diagnostics
  - Separate Immersed Thermowell
- Automatic Flue Damper
  - 10 ft. Power Cord Included (120 VAC)
- Eco-Defender Safety System® featuring the patented advanced ScreenLok® Technology flame arrestor design
  - Digital Thermal Sensor and Resettable Thermal Switch
  - Maintenance-Free
  - Sight Window
  - Pedestal Base
- Ultra Low NOx Burner with Primary and Secondary Air Distribution Devices
- Hydrojet® Total Performance System
- Vitraglas® Lining
- Non-CFC Foam Insulation
- Water Connections—3⁄4" NPT
- Heat Traps
- Protective Magnesium Anode Rod
- 3"x4" "Snap Lock" Draft Diverter
- T&P Relief Valve
- Low Restrictive Brass Drain Valve
- Design Certified by CSA International (formerly AGA and CGA).
- Complies with the Latest Ultra Low NOx Requirement (10 ng/J NOx limit)

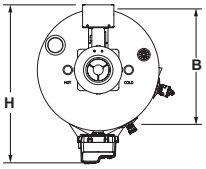

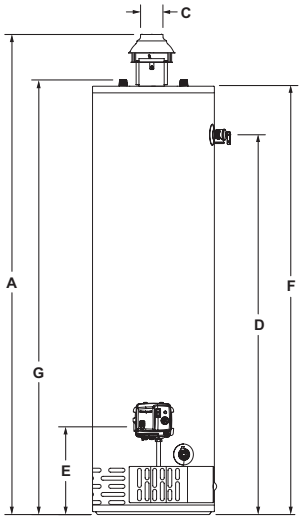

URG1D50T6N

Ultra Low NOx Atmospheric Vent Damper Models

DIMENSIONS IN INCHES

Meet or exceed ASHRAE 90.1b (current standard) C.E.C. Listed
78% Recovery Efficiency

NATURAL GAS MODELS						Recovery 90°F Rise*		A	B	C	D	E	F	G	H	
Model Number	Nominal Gal. Cap.	DOE Rated Storage Volume	Input BTU/Hr.	1st Hour Rating (Gal.)	Uniform Energy Factor	Nat U.S. GPH	Nat Imp. GPH	Floor to Flue Conn.	Jacket Dia.	Vent Size	Floor to T&P Conn.	Floor to Gas Conn.	Floor to Water Conn.	Floor to Water Conn.	Depth	Approx. Shipping Weight (lbs)
URG1D30T6N	30	28	32,000	63	0.62	34	25	63	16	3 x 4	49 7/8	11 3/4	56 3/8	57 1/8	20 3/4	120
URG1D40S6N	40	38	40,000	73	0.59	43	36	54 13/16	20	3 x 4	41	11 3/4	48 1/8	49 1/8	24 3/4	151
URG1D40T6N	40	38	40,000	75	0.64	43	36	63 9/16	18	3 x 4	50 1/8	11 3/4	56 3/4	57 1/2	22 3/4	138
URG1D50T6N	50	48	40,000	83	0.63	54	45	63 3/8	20	3 x 4	49 7/8	11 3/4	56 3/4	57 7/8	24 3/4	164
★ URG2D40S6N	40	38	38,000	70	0.64	40	33	52 1/2	22	3 x 4	40 7/8	11 3/4	48 11/16	48 7/8	26 1/8	159
★ URG2D50S6N	50	47	40,000	79	0.68	42	35	63 1/2	22	3 x 4	49 7/8	11 3/4	56 1/2	58	26 1/8	172

Available in Natural Gas only.
For 10 year models, change suffix from "6" to "10".
* Based on manufacturer's rated recovery efficiency.
Uniform Energy Factor and First Hour Rating are based on the latest AHRI directory listings.
★ = ENERGY STAR® Qualified.

© 2017, Bradford White Corporation. All Rights Reserved.

Residential Gas
Ultra Low NOx Atmospheric Vent Models

- Bradford White ICON System™
  - Enhanced Performance
  - Advanced Temperature Control System
  - Intelligent Diagnostics
  - Separate Immersed Thermowell
- Eco-Defender Safety System® featuring the patented advanced ScreenLok® Technology flame arrestor design
  - Digital Thermal Sensor and Resettable Thermal Switch
  - Maintenance-Free
  - Sight Window
  - Pedestal Base
- Ultra Low NOx Burner with Primary and Secondary Air Distribution Devices
- Hydrojet® Total Performance System
- Vitraglas® Lining
- Non-CFC Foam Insulation
- Water Connections—3/4" NPT
- Heat Traps
- Protective Magnesium Anode Rod
- 3"x4" "Snap Lock" Draft Diverter
- Flue Baffle
- Steel Tank
- T&P Relief Valve
- Low Restrictive Brass Drain Valve
- Design Certified by CSA International (formerly AGA and CGA)
- Complies with the Latest Ultra Low NOx Requirement (10 ng/J NOx limit)

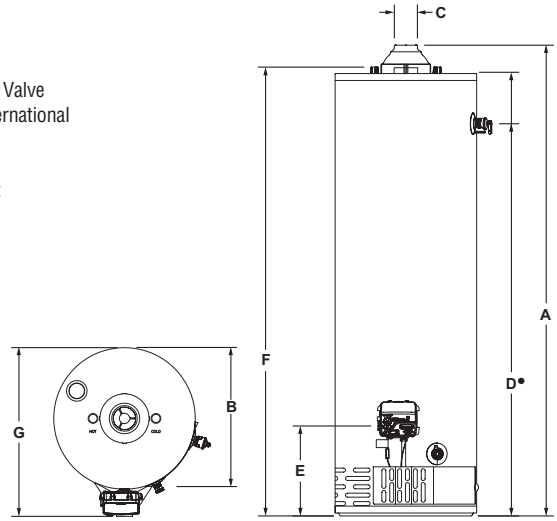

URG250T6N

Ultra Low NOx Atmospheric Vent Models

DIMENSIONS IN INCHES

Meet or exceed ASHRAE 90.1b (current standard) C.E.C. Listed
80% Recovery Efficiency

NATURAL GAS MODELS						Recovery 90°F Rise*		A	B	C	D	E	F	G	
Model Number	Nominal Gal. Cap.	DOE Rated Storage Volume	Input BTU/Hr.	1st Hour Rating (Gal.)	Uniform Energy Factor	Nat U.S. GPH	Nat Imp. GPH	Floor to Flue Conn.	Jacket Dia.	Vent Size	Floor to T&P Conn.	Floor to Gas Conn.	Floor to Water Conn.	Depth	Approx. Shipping Weight (lbs)
URG130T6N•	30	28	27,000	59	0.60	29	24	59 1/8	16	3 x 4	49 3/4 / 56 3/8	11 3/4	57 1/2	19 1/2	112
URG230T6N•	30	28	32,000	63	0.61	34	28	59 7/8	18	3 x 4	49 7/8 / 56 3/8	11 3/4	57	21 1/2	121
URG140T6N•	40	38	34,000	71	0.59	37	31	60 3/4	18	3 x 4	51 1/2 / 59 1/2	11 3/4	59 1/8	21 1/2	130
URG240T6N•	40	38	40,000	75	0.64	43	36	60 1/4	20	3 x 4	50 / 56 5/8	11 3/4	57 1/2	23 1/2	139
URG240S6N•	40	38	40,000	73	0.59	43	36	51 5/8	22	3 x 4	41 / 47 1/4	11 3/4	49 1/8	25 1/2	146
URG150T6N•	50	47	34,000	79	0.63	37	31	59 5/8	20	3 x 4	50 / 56 3/8	11 3/4	58	23 1/2	153
URG250T6N•	50	48	40,000	83	0.64	43	36	60 3/16	22	3 x 4	49 7/8 / 57	11 3/4	58 5/16	25 1/2	161
URG250L6N	48	47	40,000	83	0.63	43	36	51 5/8	24	3 x 4	40 5/8	11 3/4	49 3/8	27 1/2	172
URG250S6N•	50	47	50,000	86	0.63	54	45	59 1/2	22	4	49 7/8 / 57	11 3/4	58 3/16	25 1/2	167

Available in Natural Gas only.
For 10 year models, change suffix from "6" to "10".
* Based on manufacturer's rated recovery efficiency.
• Models feature optional top T&P location and must be specified when ordering.
Uniform Energy Factor and First Hour Rating are based on the latest AHRI directory listings.
(URG130T, URG140T, & URG150T available with top T&P location ONLY)

© 2017, Bradford White Corporation. All Rights Reserved.

Residential Gas

Ultra Low NOx Atmospheric Vent High Input Models

- Bradford White ICON System™
  - Enhanced Performance
  - Advanced Temperature Control System
  - Intelligent Diagnostics
  - Separate Immersed Thermowell
- Eco-Defender Safety System® featuring the patented advanced ScreenLok® Technology flame arrestor design (URG250H6N only)
  - Digital Thermal Sensor and Resettable Thermal Switch (URG250H6N only)
  - Maintenance-Free
  - Sight Window
  - Pedestal Base (URG250H6N & URG275H6N only)
- Defender Combustion Chamber (URG250H6N only)
- Ultra Low NOx Burner with Primary and Secondary Air Distribution Devices
- Hydrojet® Total Performance System
- Vitraglas® Lining
- Side Connections—3/4" NPT
- Non-CFC Foam Insulation
- Water Connections
- Heat Traps
- Protective Magnesium Anode Rod
- 4" (107mm) "Snap Lock" Draft Diverter.
- T&P Relief Valve
- Low Restrictive Brass Drain Valve
- Design Certified by CSA International (formerly AGA and CGA).
- URG250H6N Complies with the Latest Ultra Low NOx Requirement (10 ng/J NOx limit) URG275H6N / URG2100H6N complies with (14 ng/J NOx limit)

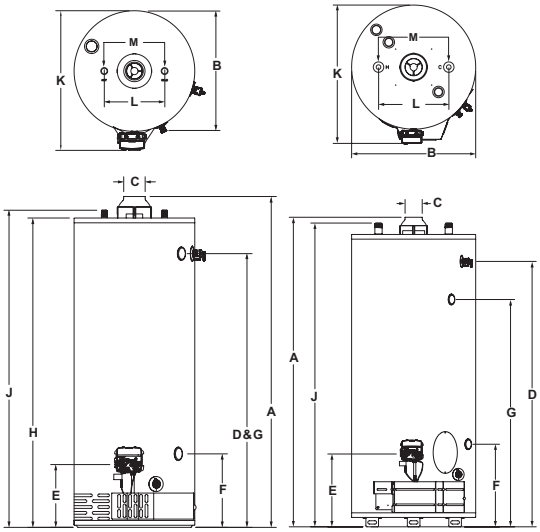

Models URG250H6N & URG275H6N

Model URG2100H6N

URG250H6N

Ultra Low NOx Atmospheric Vent High Input Models

DIMENSIONS IN INCHES

Meet or exceed ASHRAE 90.1b (current standard) C.E.C. Listed
Recovery efficiency up to 80%

NATURAL GAS MODELS						Recovery 90°F Rise*		A	B	C	D	E	F	G	H	J	K	L	M	
Model Number	Nominal Gal. Cap.	DOE Rated Storage Volume	Input BTU/Hr.	1st Hour Rating (Gal.)	Uniform Energy Factor	Nat U.S. GPH	Nat Imp. GPH	Floor to Flue Conn.	Jacket Dia.	Vent Size	Floor to T&P Conn.	Floor to Gas Conn.	Floor to Space Heating Return	Floor to Space Heating Outlet	Floor to Top of Heater	Floor to Water Conn.	Depth	C/L of Water Conn.	NPT	Approx. Shipping Weight (lbs)
URG250H6N	48	46	55,000	90	0.63	59	49	60 5/16	22	4	49 7/8	11 1/2	13 3/8	49 7/8	56 3/8	57 13/16	25 7/16	11	3/4	194
URG275H6N	75	72	76,000	126	0.59	82	68	64 1/8	26	4	53 9/16	15 1/8	16 5/8	53 9/16	60 1/8	61 1/8	29 7/16	11	1	286
URG2100H6N	100	95	85,000	137	0.57	92	77	72 5/8	28 1/4	4	60 7/16	16 3/4	18 3/4	51 3/4	66 5/8	69 1/8	31 1/2	16	1 1/4	416

Available in Natural Gas only.
For 10 year models, change suffix from "6" to "10".
* Based on manufacturer's rated recovery efficiency.
Uniform Energy Factor and First Hour Rating are based on the latest AHRI directory listings.

© 2017, Bradford White Corporation. All Rights Reserved.

Residential Gas
Ultra Low NOx TTW® Power Vent Models

- ENERGY STAR® Qualified—Some models
- Ultra Low NOx Burner with Primary and Secondary Air Distribution Devices
- Bradford White ICON System™
  - Enhanced Performance
  - Advanced Temperature Control System
  - Intelligent Diagnostics
  - Separate Immersed Thermowell
- Eco-Defender Safety System® featuring the patented advanced ScreenLok® Technology flame arrestor design (except models above 75,000 BTU/Hr.)
  - Digital Thermal Sensor and Resettable Thermal Switch
  - Maintenance-Free
  - Sight Window
  - Pedestal Base
- Powerful Blower Motor
  - 10 ft. Power Cord Included (120 VAC)
- Horizontal and Vertical Venting
- Hydrojet® Total Performance System
- Vitraglas® Lining
- Non-CFC Foam Insulation
- Water Connections
- Heat Traps
- Protective Magnesium Anode Rod
- T&P Relief Valve
- Low Restrictive Brass Drain Valve
- All Models Comply with the Latest Ultra Low NOx Requirement (10 ng/J NOx limit) except URG2PV75H6N (14 ng/J NOx limit)

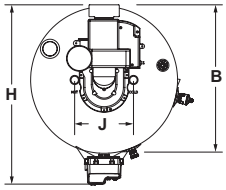

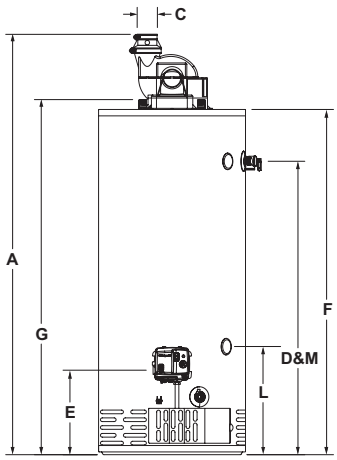

URG2PV50H6N

Ultra Low NOx TTW® Power Vent Models

DIMENSIONS IN INCHES

Meet or exceed ASHRAE 90.1b (current standard) C.E.C. Listed
80% Recovery Efficiency

NATURAL GAS MODELS						Recovery 90°F Rise*		A	B	C	D	E	F	G	H	J	
Model Number	Nominal Gal. Cap.	DOE Rated Storage Volume	Input BTU/Hr.	1st Hour Rating (Gal.)	Uniform Energy Factor	Nat U.S. GPH	Nat Imp. GPH	Floor to Vent Conn.	Jacket Dia.	Vent Size	Floor to T&P Conn.	Floor to Gas Conn.	Floor to Top of Heater	Floor to Water Conn.	Depth	C/L of Water Conn.	Approx. Shipping Weight (lbs)
URG1PV40S6N	40	38	40,000	72	0.63	43	36	57 1/4	20	2 or 3	40	11 3/4	47 1/8	48 1/2	24 7/8	8	144
URG1PV50S6N	50	48	40,000	81	0.67	43	36	58 1/4	22	2 or 3	40 5/8	11 3/4	48 1/8	49 1/2	26 7/8	8	169
★ URG2PV40T6N	40	38	40,000	72	0.67	43	36	66 7/8	20	2 or 3	49 7/8	11 3/4	56 5/8	58	24 7/16	8	151
★ URG2PV50T6N	50	48	40,000	81	0.70	43	36	66 7/8	22	2 or 3	49 7/8	11 3/4	56 5/8	58	26 7/16	8	176
★ URG2PV50H6N	48	46	56,000	90	0.70	60	50	66 3/8	22	3 or 4	49 7/8	11 3/4	56 5/8	58	26 1/2	11	192
URG2PV75H6N	75	72	76,000	126	0.59	82	68	69 1/4	26	3 or 4	51 7/8	11 3/4	59 1/2	61	30 1/4	11	270

Available in Natural Gas only. For 10 year models, change suffix from “6” to “10”.

* Based on manufacturer’s rated recovery efficiency.

120 VAC Required for Power Venting / 120 VAC, 60HZ, 3.1 Amperes.

Uniform Energy Factor and First Hour Rating are based on the latest AHRI directory listings.

★ = ENERGY STAR® Qualified.

		2" Vent Pipe	3" Vent Pipe	3" Vent Pipe	4" Vent Pipe
		URG1PV40S6N URG1PV50S6N URG2PV40T6N URG2PV50T6N		URG2PV50H6N URG2PV75H6N	
Max. Equivalent Length		†50 ft.	†120 ft.	†50 ft.	†180 ft.
Min. Equivalent Length		7 ft.	15 ft.	7 ft.	15 ft.
Number	1	45 ft.	115 ft.	45 ft.	175 ft.
of	2	40 ft.	110 ft.	40 ft.	170 ft.
90° Elbows	3	35 ft.	105 ft.	35 ft.	165 ft.

† For high altitude installations, consult the installation instructions.

© 2017, Bradford White Corporation. All Rights Reserved.

Residential Gas
Ultra Low NOx Power Direct Vent Models

- ENERGY STAR® Qualified
- Ultra Low NOx Burner with Primary and Secondary Air Distribution Devices
- Eco-Defender Safety System®
  - Maintenance-Free
  - Sight Window
  - Pedestal Base
- Closed Combustion Venting System
- Bradford White ICON System™
  - Enhanced Performance
  - Advanced Temperature Control System
  - Intelligent Diagnostics
  - Separate Immersed Thermowell
- Cast Aluminum Air Intake Boot
- Hydrojet® Total Performance System
- Vitraglas® Lining
- Powerful Blower Model
  - 10 ft. Power Cord Included (120 VAC)
- Optional Concentric Vent Kit Termination
- Horizontal and Vertical Venting
- 2" Non-CFC Foam Insulation
- Water Connections— 3/4" NPT
- 3/4" NPT Side Connections—(URG2PDV50H6N only)
- Heat Traps
- Protective Magnesium Anode Rod
- T&P Relief Valve
- Low Restrictive Brass Drain Valve
- Complies with the Latest Ultra Low NOx Requirement (10 ng/J NOx limit)

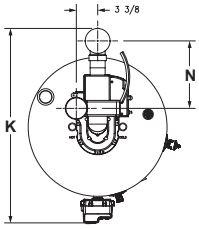

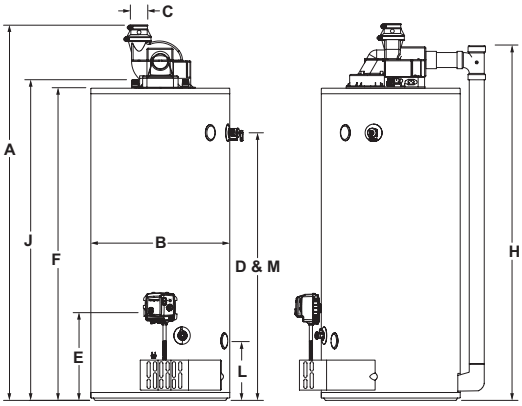

URG2PDV50H6N

Ultra Low NOx Power Direct Vent Models

DIMENSIONS IN INCHES

Meet or exceed ASHRAE 90.1b (current standard) C.E.C. Listed
78% Recovery Efficiency

NATURAL GAS MODELS						Recovery 90°F Rise*		A	B	C	D	E	F	H	J	K	L	M	N	
Model Number	Nominal Gal. Cap.	DOE Rated Storage Volume	Input BTU/Hr.	1st Hour Rating (Gal.)	Uniform Energy Factor	Nat U.S. GPH	Nat Imp. GPH	Floor to Exhaust Outlet	Jacket Dia.	Vent Size	Floor to T&P Conn.	Floor to Gas Conn.	Floor to Top of Heater	Floor to Air Intake	Floor to Water Conn.	Depth	Floor to Space Heating Return	Floor to Space Heating Supply	C/L Distance From Intake to Exhaust	Approx. Shipping Weight (lbs)
★ URG2PDV40S6N	40	38	40,000	72	0.67	43	36	59 1/2	22	2 or 3	42 3/8	13 7/8	49 3/4	59 3/8	51	30 3/4	—	—	10 1/2	170
★ URG2PDV50S6N	50	48	40,000	81	0.70	43	36	59	24	2 or 3	43	13 7/8	50 1/2	50 3/4	52	32 3/4	—	—	11 1/2	196
★ URG2PDV50H6N	48	46	50,000	85	0.68	64	45	67 3/4	22	3 or 4	52 1/4	13 7/8	59 1/4	58 3/4	60	32	15 3/4	52 1/4	9 1/4	208

Available in Natural Gas only. For 10 year model, change suffix "6" to "10".
* Based on manufacturer's rated recovery efficiency.
120 VAC Required for Power Venting / 120 VAC, 60HZ, 3.1 Amperes.
Uniform Energy Factor and First Hour Rating are based on the latest AHRI directory listings.

★ = ENERGY STAR® Qualified.

Concentric Vent Kit Termination

2" Kit	A (in.)
P/N 239-44069-02	29 1/4
3" Kit	**A (in.)**
P/N 239-44069-01	36 1/4

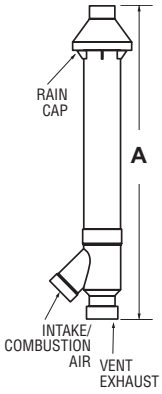

		2" Vent Pipe	3" Vent Pipe		4" Vent Pipe
		URG2PDV40S6N URG2PDV50S6N	URG2PDV40S6N URG2PDV50S6N	URG2PDV50H6N	URG2PDV50H6N
Max. Intake Length		35 ft.	85 ft.	60 ft.	100 ft.
Max. Exhaust Length		35 ft.	85 ft.	60 ft.	100 ft.
Min. Vent Length		7 ft.	7 ft.	7 ft.	7 ft.
Number	1	30 ft.	80 ft.	55 ft.	95 ft.
of	2	25 ft.	75 ft.	50 ft.	90 ft.
90° Elbows	3	20 ft.	70 ft.	45 ft.	85 ft.

Subtract 5ft. for each additional 90º elbow.

Committed to American Manufacturing, Wholesale Distribution, and Professional Installation.

© 2017, Bradford White Corporation. All Rights Reserved.

Residential Gas
Ultra Low NOx Direct Vent Models

- Bradford White ICON System™
  - Enhanced Performance
  - Advanced Temperature Control System
  - Intelligent Diagnostics
  - Separate Immersed Thermowell
- Eco-Defender Safety System®
  - Resettable Thermal Switch
  - Maintenance-Free
  - Sight Window
  - Pedestal Base
- Ultra Low NOx Burner with Primary and Secondary Air Distribution Devices
- Closed Combustion
- Reinforced Seals
- Hydrojet® Total Performance System
- Vitraglas® Lining
- Cast Aluminum Air Intake Boot
- Telescoping Solid Vent Kits
- Flexible Vent Kit
- Side Connections—3/4" NPT (URG2DV50H6N only)
- 2" Non-CFC Foam Insulation
- Water Connections—3/4" NPT
- Heat Traps
- Protective Magnesium Anode Rod
- T&P Relief Valve
- Low Restrictive Brass Drain Valve
- Design Certified by CSA International (formerly AGA and CGA).
- Complies with the Latest Ultra Low NOx Requirement (10 ng/J NOx limit)

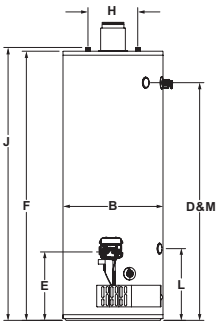

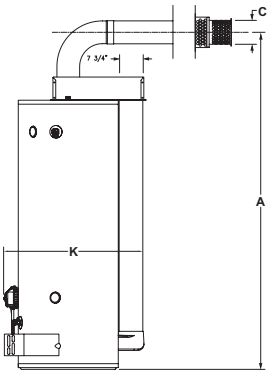

Telescoping Solid Vent Kit (Side View)

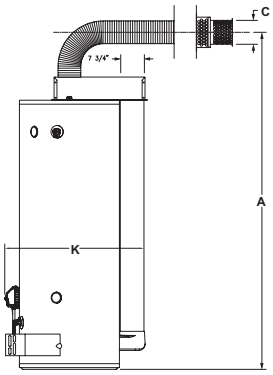

Flexible Vent Kit (Side View)

URG2DV50H6N

Ultra Low NOx Direct Vent Models

DIMENSIONS IN INCHES

Meet or exceed ASHRAE 90.1b (current standard) C.E.C. Listed
78% Recovery Efficiency

NATURAL GAS MODELS						Recovery 90°F Rise*		A	B	C		D	E	F	H	J	K	L	M	
Model Number	Nominal Gal. Cap.	DOE Rated Storage Volume	Input BTU/Hr.	1st Hour Rating (Gal.)	Uniform Energy Factor	Nat U.S. GPH	Nat Imp. GPH	Floor to C/L of Vent	Jacket Dia.	Vent Size I.D.	O.D.	Floor to T&P Conn.	Floor to Gas Conn.	Floor to Top of Heater	C/L of Water Conn.	Floor to Water Conn.	Depth	Floor to Space Heating Inlet	Floor to Space Heating Onlet	Approx. Shipping Weight (lbs)
URG2DV40S6N	40	38	38,000	73	0.59	41	34	63 1/2 min.	22	3	5	43 3/8	15	50 1/4	8	51 1/2	31 1/8	—	—	198
URG2DV50S6N	50	47	38,000	80	0.63	41	34	72 1/2 min.	22	3	5	52 1/4	15	59 1/4	8	60 1/2	31 1/8	—	—	221
URG2DV50H6N	48	46	45,000	83	0.63	46	38	75 7/8 min.	22	4	6	52 1/4	15	59 1/4	11	60 1/8	30 5/8	15 3/4	52 1/4	240

Available in Natural Gas only. For 10 year models, change suffix from "6" to "10".

* Based on manufacturer's rated recovery efficiency.

Uniform Energy Factor and First Hour Rating are based on the latest AHRI directory listings.

URG2DV40S6N / URG2DV50S6N Solid Vent Kit: Part No. 239-51283-00. Weight: 17 lbs.
URG2DV40S6N / URG2DV50S6N Flexible Vent Kit: Part No. 239-51284-00. Weight: 11 lbs.
URG2DV50H6N Solid Vent Kit: Part No. 239-51286-00. Weight: 22 lbs.
URG2DV50H6N Flexible Vent Kit: Part No. 239-51287-00. Weight: 13 lbs.

Kits can be ordered and shipped with water heater, or ordered and shipped separately. For vent kit components and venting instructions, refer to Installation and Operation Manual.

URG2DV40S6N / URG2DV50S6N Optional Telescoping Solid Vent Kits:

Kit "A"	Telescopes from 4 3/4" to 5 11/16"	Part No. 239-41260-00
Kit "B"	Telescopes from 6 1/2" to 9 3/16"	Part No. 239-41331-00
Kit "C"	Telescopes from 13 3/4" to 23 11/16"	Part No. 239-41029-00
Kit "D"	Telescopes from 49 13/16" to 95 13/16"	Part No. 239-41424-00

URG2DV50H6N Optional Telescoping Solid Vent Kits:

Kit "F"	Telescopes from 4 3/4" to 5 11/16"	Part No. 239-42516-00
Kit "G"	Telescopes from 6 1/2" to 9 3/16"	Part No. 239-42517-00
Kit "H"	Telescopes from 13 3/4" to 23 11/16"	Part No. 239-42514-00
Kit "I"	Telescopes from 49 13/16" to 95 13/16"	Part No. 239-42512-00

© 2017, Bradford White Corporation. All Rights Reserved.

Residential Gas

Infiniti Tankless™ High Efficiency Models

- ENERGY STAR® Qualified
- Featuring the SRT™ Scale Reduction Technology
  - Vertical Modulating Burner Design
  - Dual Fan Configuration
  - Internal Turbulators
  - Dual Heat Exchanger
- Built-In Digital Control
- Active Bypass
- Cascading Kit (Optional)
- Venting Flexibility
- Gas Connection Flexibility—1/2", 3/4", or 1"
- Inlet Water Filter
- Space Saving Installation
- Built-In Freeze Protection
- Interior and Exterior Installation Capability
- Complies with the Latest Ultra-Low NOx Requirement (10 ng/J NOx limit)
- High Temperature Kit- max set point 184° F (optional)

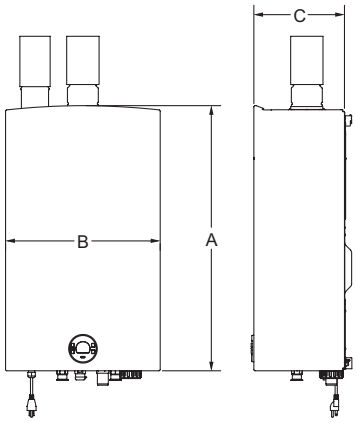

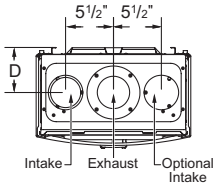

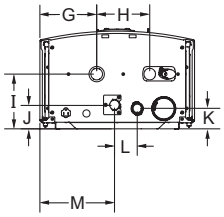

RTG-199HE-N

Infiniti Tankless™ High Efficiency Models

DIMENSIONS IN INCHES

NATURAL GAS AND LIQUID PROPANE GAS MODELS

Model Number	Installation	Input BTU/Hr.	Vent Conn.	Recovery 90°F Rise* GPM	Uniform Energy Factor	Minimum Water Flow GPM	Maximum Temperature Setting
★ RTG-199HE-N	Indoor / Outdoor*	19,900–199,000	3	4.2	0.91	0.5	140º F

	A	B	C	D	G	H	I	J	K	L	L	
Model Number	Height	Width	Depth	Intake/ Exhaust Center Line	Hot Water Outlet	Cold Water Inlet	Hot Water Outlet	Gas Conn.	Condensate Tee	Condensate Tee	Gas Conn	Approx. Shipping Weight (lbs)
★ RTG-199HE-N	30 9/16	17 13/16	10 7/16	5 3/16	6 9/16	6 1/8	6 5/16	2 11/16	2 3/8	2 5/8	2 3/8	74

For Propane (LP) Models change suffix "N" to "X".

Requires an electrical power supply from a 120VAC 60Hz properly rated receptacle and must be properly grounded. Power supply cord provided.

Uniform Energy Factor is based on the latest AHRI directory listings.

* Outdoor installation requires optional outdoor kit

★ = ENERGY STAR® Qualified.

	2" Venting	3" Venting		4" Venting	
	Twin Pipe	Twin Pipe	Concentric	Twin Pipe	Concentric
Max. Allowable Exhaust Vent Length	9.5 ft.	31.0 ft.	23.0 ft.	63.0 ft.	43.0 ft.
Max. Allowable Intake Vent Length	9.5 ft.	31.0 ft.	23.0 ft.	63.0 ft.	43.0 ft.
Combined Max. Allowable Vent	19.0 ft.	62.0 ft.	46.0 ft.	126.0 ft.	86.0 ft.
Elbow Equivalency 90º	5.0 ft.	5.0 ft.	5.0 ft.	5.0 ft.	5.0 ft.
Elbow Equivalency 45º	2.5 ft.	2.5 ft.	2.5 ft.	2.5 ft.	2.5 ft.
Max. Number of 90° Elbows	1	5	4	7	7

© 2017, Bradford White Corporation. All Rights Reserved.

Residential Gas

Infiniti Tankless™ Mid Efficiency Models

- Featuring the SRT™ Scale Reduction Technology
  - Vertical Modulating Burner Design
  - Dual Fan Configuration
  - Internal Turbulators
  - Dual Heat Exchanger
- Built-In Digital Control
- Cascading Kit (Optional)
- Gas Connection Flexibility—1/2", 3/4", or 1"
- Inlet Water Filter
- Space Saving Installation
- Built-In Freeze Protection
- Interior and Exterior Installation Capability
- Complies with the Latest Ultra-Low NOx Requirement (10 ng/J NOx limit)
- High Temperature Kit- max set point 184° F (optional)

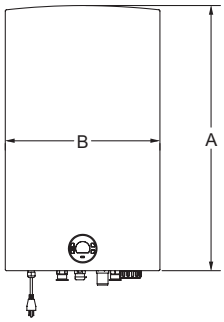

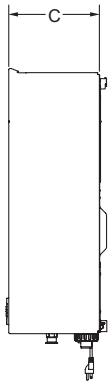

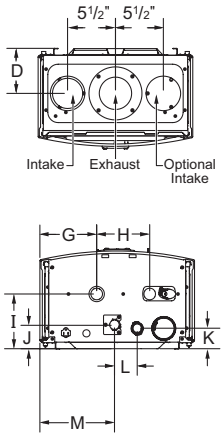

RTG-199ME-N

Infiniti Tankless™ Mid Efficiency Models

DIMENSIONS IN INCHES

NATURAL GAS AND LIQUID PROPANE GAS MODELS

Model Number	Installation	Input BTU/Hr.	Vent Conn.	Recovery 90°F Rise* GPM	Uniform Energy Factor	Minimum Water Flow GPM	Maximum Temperature Setting
RTG-199ME-N	Indoor / Outdoor*	19,900–199,000	3	3.7	0.84	0.5	140º F

	A	B	C	D	G	H	I	J	K	L	L	
Model Number	Height	Width	Depth	Intake/ Exhaust Center Line	Hot Water Outlet	Cold Water Inlet	Hot Water Outlet	Gas Conn.	Condensate Tee	Condensate Tee	Gas Conn	Approx. Shipping Weight (lbs)
RTG-199ME-N	30 9/16	17 13/16	10 7/16	5 3/16	6 9/16	6 1/8	6 5/16	2 11/16	2 3/8	2 5/8	2 3/8	67

For Propane (LP) Models change suffix "N" to "X".

Requires an electrical power supply from a 120VAC 60Hz properly rated receptacle and must be properly grounded. Power supply cord provided.

Uniform Energy Factor is based on the latest AHRI directory listings.

* Outdoor installation requires optional outdoor kit

	3" Venting	4" Venting
Max. Allowable Exhaust Vent Length	28.5 ft.	61.25 ft.
Max. Allowable Intake Vent Length	28.5 ft.	61.25 ft.
Combined Max. Allowable Vent	57.0 ft.	122.5 ft.
Elbow Equivalency 90º	5.0 ft.	5.0 ft.
Elbow Equivalency 45º	2.5 ft.	2.5 ft.
Max. Number of 90° Elbows	5	7

© 2017, Bradford White Corporation. All Rights Reserved.

Residential Electric
Energy Saver Water Heaters

General Information

All models are ETL listed. All water connections are ¾" NPT true dielectric fittings. All electrical connections are ¾". All models are certified at 300 psi test pressure and 150 psi working pressure. All models come equipped with two installed heat traps (except Utility, Wall Hung models, and RE120L).

Note: The **Upright** and **Lowboy** heaters will be wired single phase interlocking (non-simultaneous) 240 volt with 4500 watt elements, unless otherwise specified. Other wattages are available up to 6000 watts (208, 240, 277 and 480 volt). (Reference chart on following page for non-simultaneous and simultaneous limitations). 4500 watt/240 volt elements require a 25 amp or 30 amp circuit breaker. For 120 volt (non-simultaneous), all models have a maximum wattage of 3000. (120 and 277 volt can only be wired single phase.)

Note: The **Utility** and **Wall Hung** Heaters will be wired for 120 volt with a 1500 watt element. The 1500 watt/120 volt element requires a 20 amp breaker. Other wattages are available. Maximum wattage for 6 and 12 gallon tall utility models is 3000W. Maximum wattage for 10, 12 and 15 gallon utility models is 6000W. Maximum wattage for the 6 gallon wall hung model is 3000W. Maximum wattage for 12, 20 and 30 gallon wall hung models is 6000W.

Incoloy Element Availability Chart

Watts	120V	208V	240V	277V	480V
1500	yes	yes	yes	no	no
2000	no	yes	yes	yes	yes
2500	no	yes	yes	no	no
3000	no	yes	yes	yes	yes
3500	no	yes	yes	no	no
4000	no	yes	yes	yes	yes
4500	no	yes	yes	yes	yes
5000	no	yes	yes	yes	yes
5500	no	yes	yes	yes	yes
6000	no	yes	yes	yes	yes

Phase		
	1	Single Phase
	3	Three Phase

EX: RE3340T6-1NCWW

Operation		
	N	Non-simultaneous
	S	Simultaneous

EX: RE3340T6-1NCWW

Designator	A	C	E	H	J	L*
Voltage	120	208/240	277	480	600	208

EX: RE3340T6-1NCWW

* Use "L" voltage designator if wiring 208V with 5000, 5500 or 6000 watt.

Wattage Limitations for Simultaneous Operation	Voltage				
	120V	208V	240V	277V	480V
1500W / 1500W	yes	yes	yes	yes	yes
2000W / 2000W	no	yes	yes	yes	yes
2500W / 2500W	no	yes	yes	yes	yes
3000W / 3000W	no	yes	yes	yes	yes
3500W / 3500W	no	yes	yes	no	no
4000W / 4000W	no	yes	yes	yes	yes
4500W / 4500W	no	yes	yes	yes	yes
5000W / 5000W	no	yes	yes	yes	yes
5500W / 5500W	no	no	yes	no	no
6000W / 6000W	no	no	no	yes	yes

Wattage Limitations for Non-Simultaneous Operation	Wattage Limitations for Single Element Operation	Voltage				
		120V	208V	240V	277V	480V
1500W / 1500W	1500W	yes	yes	yes	yes	yes
2000W / 2000W	2000W	yes	yes	yes	yes	yes
2500W / 2500W	2500W	yes	yes	yes	yes	yes
3000W / 3000W	3000W	yes	yes	yes	yes	yes
3500W / 3500W	3500W	no	yes	yes	no	no
4000W / 4000W	4000W	no	yes	yes	yes	yes
4500W / 4500W	4500W	no	yes	yes	yes	yes
5000W / 5000W	5000W	no	yes	yes	yes	yes
5500W / 5500W	5500W	no	yes	yes	yes**	yes**
6000W / 6000W	6000W	no	yes	yes	yes	yes

** INCOLOY© element only.

For 120V, 277V, 480V, and 600V operation

Designator	J	K	L	M	N	P	R	S	T	W	X	Y	Z
Watt	1000	1250	1500	2000	2500	3000	3500	3800	4000	4500	5000	5500	6000

EX: RE3340T6-1NCWW

For 240V and 208V operation (Dual rated elements show a value for both 240V and 208V)

Designator	J	K	L	M	N	P	R	S	T	W	X	Y	Z	X**	Y**	Z**
240V Wattage	1000	1250	1500	2000	2500	3000	3500	3800	4000	4500	5000	5500	6000	—	—	—
208V Wattage	—	—	1000	1500	2000	—	2500	—	3000	3500	—	4000	4500	5000	5500†	6000†

EX: RE3340T6-1NCWW, will give 240V with 4500W/4500W. This same heater can also be energized at 208V with reduced wattage of 3500W/3500W.

* Use "L" voltage designator if wiring 208V with 5000, 5500 or 6000 watt.

† Available in non-simultaneous only.

© 2017, Bradford White Corporation. All Rights Reserved.

Residential Electric
AeroTherm™ Series Heat Pump Models

- ENERGY STAR® Qualified
- The AeroTherm™ Series Control Panel
  - User-Friendly, Easy-to-Read Display
  - LED's Clearly Indicate the Current Operating Mode
  - Display Communicates Current Status, Mode and Set Point, and Displays Error Messages when Applicable
- Operating Modes Offer Flexibility
  - Heat Pump (Only) Mode
  - Hybrid Mode
  - Electric (Only) Mode
  - Vacation Mode
- Quiet Operation
- Can Be Laid Down for Easier Transportation
- Easily Accessible Top Mounted Washable Air Filter
- Operating Air Temperature Range of 35-120°F for the Heat Pump
- Backup Electric Heating Elements
- Direct Heat Transfer with Immersed Elements
- 2" Non-CFC Foam Insulation
- Water Connections—3/4" NPT
- Protective Magnesium Alloy Anode Rod
- T&P Relief Valve
- Low Restrictive Brass Drain Valve
- Design Certified to NSF/ANSI 372 (Lead Content).
- Northern Climate Tier 3 Capable
- Optional Ducting Kit

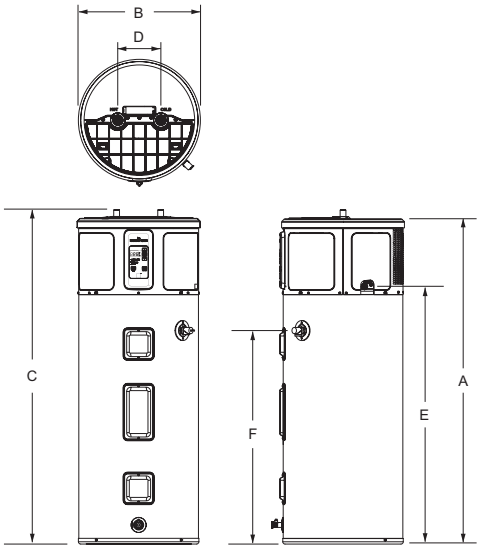

RE2H50R10B

AeroTherm™ Series Heat Pump Models

DIMENSIONS IN INCHES **C.E.C. Listed**

ELECTRIC MODELS					Recovery 90°F Rise*		A	B	C	D	E	F	
Model Number	Nominal Gal. Cap.	DOE Rated Storage Volume	1st Hour Delivery Rating	Uniform Energy Factor	Nat U.S. GPH	Nat Imp. GPH	Floor to Heater Top	Jacket Dia.	Floor to Water Conn.	Distance Between Water Conn.	Floor to Condensate Conn.	Floor to T&P Heater	Approx. Shipping Weight (lbs)
RE2H50R10B	50	45	64	3.24	21	18	59 1/8	21 3/4	60 3/4	8	46 3/4	38 3/4	195
RE2H80R10B	80	75	89	3.25	21	18	71 1/8	25	73 1/2	8	58 3/4	50 3/8	235

* Based on 4500/4000W, Non-Simultaneous Operation.
Uniform Energy Factor and First Hour Rating are based on the latest AHRI directory listings.

PARTS INCLUDED

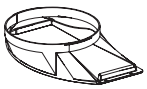

Upper Inlet Duct Adapter

Outlet Duct Adapter

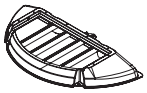

Lower Inlet Duct Adapter

Drilling Screws (6)

Assembly Screws (8)

Inlet Duct Filter

8" Hose Clamps (2)

Optional Ducting Kit: Part No. GVK8HS.
Kit installation also requires 8" insulated flexible ducting, ducting support hangers, and exterior wall vents for inlet & outlet. Additional clearances required for ducting, refer to ducting kit instructions.

© 2017, Bradford White Corporation. All Rights Reserved.

Residential Electric
Upright Models

- Fully Automatic Controls
- Direct Heat Transfer with Immersed Elements
- Hydrojet® Total Performance System
- Vitraglas® Lining
- Non-CFC Foam Insulation
- Water Connections—3/4" NPT
- Heat Traps
- Protective Magnesium Anode Rod
- Simultaneous and Non-Simultaneous Operation Available
- Voltages Available—120V, 208V, 240V, 277V, 480V
- Single Phase or Three Phase Operation Available—(120V & 277V Single Phase Only)
- T&P Relief Valve
- Design Evaluated by ETL in Accordance with Part 280.707(d) of HUD Mobile Home Construction and Safety Standards for Energy Efficiency
- Low Restrictive Brass Drain Valve

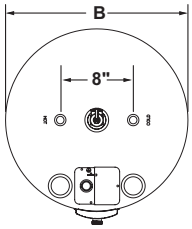

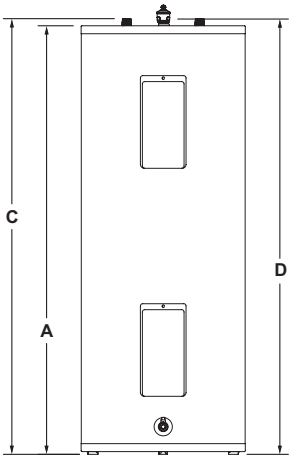

Copper Screw Type Immersion Element
(INCOLOY® type immersion element available upon request)

RE250S6

Upright Models

DIMENSIONS IN INCHES **C.E.C. Listed**

ELECTRIC MODELS					Recovery 90°F Rise*		A	B	C	D	
Model Number	Nominal Gal. Cap.	DOE Rated Storage Volume	1st Hour Rating (Gal.)	Uniform Energy Factor	Nat U.S. GPH	Nat Imp. GPH	Floor to Heater Top	Jacket Dia.	Floor to Water Conn.	Floor to T&P Conn.	Approx. Shipping Weight (lbs)
RE330S6	30	27	47	0.92	21	18	47	20	47 3/4	47 3/4	100
RE340S6	40	36	54	0.93	21	18	47 7/8	22	48 5/8	48 5/8	114
RE340T6	40	36	55	0.93	21	18	60 5/8	20	61 3/8	61 3/8	125
RE350S6	50	45	63	0.93	21	18	47	24	47 3/4	47 3/4	144
RE350T6	50	45	63	0.93	21	18	58 5/8	22	59 3/8	59 3/8	138
RE240S6†	40	36	54	0.93	21	18	48	20	48 3/4	48 3/4	123
RE250S6†	50	45	63	0.93	21	18	47	22	47 3/4	47 3/4	143

† Models include supplied insulation blanket (2" thick). Dimensions in charts above do not include blanket thickness.

For 10 year models, change suffix "6" to "10".

* Based on 4500W/4500W, Non-Simultaneous operation.

Uniform Energy Factor and First Hour Rating are based on the latest AHRI directory listings.

	Wattage Limitations for Simultaneous Operation					Wattage Limitations for Non-Simultaneous Operation				
	Voltage					Voltage				
	120V	208V	240V	277V	480V	120V	208V	240V	277V	480V
1500W / 1500W	yes	yes	yes	yes	yes	yes	yes	yes	yes	yes
2000W / 2000W	no	yes	yes	yes	yes	yes	yes	yes	yes	yes
2500W / 2500W	no	yes	yes	yes	yes	yes	yes	yes	yes	yes
3000W / 3000W	no	yes	yes	yes	yes	yes	yes	yes	yes	yes
3500W / 3500W	no	yes	yes	no	no	no	yes	yes	no	no
4000W / 4000W	no	yes	yes	yes	yes	no	yes	yes	yes	yes
4500W / 4500W	no	yes	yes	yes	yes	no	yes	yes	yes	yes
5000W / 5000W	no	yes	yes	yes	yes	no	yes	yes	yes	yes
5500W / 5500W	no	no	yes	no	no	no	yes	yes	no	no
6000W / 6000W	no	no	no	yes	yes	no	yes	yes	yes	yes

	Recovery▲ GPH Temperature Rise °F				
Wattage	60	80	90	100	120
1500W	10	8	7	6	5
2000W	14	10	9	8	7
2500W	17	13	11	10	9
3000W	21	15	14	12	10
3500W	24	18	16	14	12
4000W	28	21	18	16	14
4500W	31	23	21	19	15
5000W	34	26	23	21	17
5500W	38	29	25	23	19
6000W	41	31	28	25	21

▲ (GPH based on Non-Simultaneous operation, when Simultaneous operation the GPH will approximately double.)

© 2017, Bradford White Corporation. All Rights Reserved.

Residential Electric
Lowboy Models

- Models above 20-Gallon Meet or Exceed Efficiency Requirements
- Fully Automatic Controls
- Low Restrictive Brass Drain Valve
- Direct Heat Transfer with Immersed Elements
- Hydrojet® Total Performance System
- Vitraglas® Lining
- Non-CFC Foam Insulation
- Water Connections—3⁄4" NPT
- Heat Traps (except RE120L)
- Protective Magnesium Anode Rod
- Simultaneous and Non-Simultaneous Operation Available
- Voltages Available—120V, 208V, 240V, 277V, 480V
- Single Phase or Three Phase Operation Available—(120V & 277V Single Phase Only)
- T&P Relief Valve— Side T&P is standard. Optional top T&P location is available
- Design Evaluated by ETL in Accordance with Part 280.707(d) of HUD Mobile Home Construction and Safety Standards for Energy Efficiency

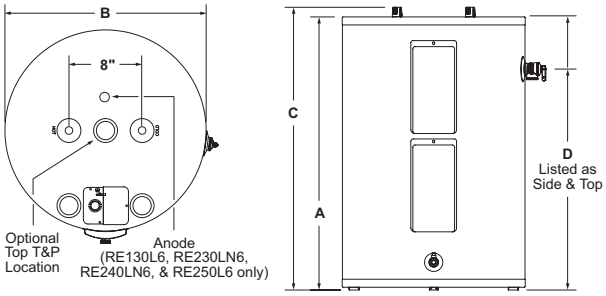

Copper Screw Type Immersion Element
(INCOLOY® type immersion element available upon request)

RE240L6

Lowboy Models

DIMENSIONS IN INCHES **C.E.C. Listed**

ELECTRIC MODELS					Recovery 90°F Rise*		A	B	C	D	
Model Number	Nominal Gal. Cap.	DOE Rated Storage Volume	1st Hour Rating (Gal.)	Uniform Energy Factor	Nat U.S. GPH	Nat Imp. GPH	Floor to Heater Top	Jacket Dia.	Floor to Water Conn.	Floor to T&P Conn.††	Approx. Shipping Weight (lbs)
RE120L6†	19	—	—	—	21	18	24 7⁄8	18	25 5⁄8	19 1⁄8 / 25 5⁄8	65
RE130L6**	28	26	42	0.92	21	18	29 3⁄4	20	31 1⁄4	21 5⁄8 / 30 1⁄2	99
RE230LN6	28	26	47	0.92	21	18	30	23	30 7⁄8	23 1⁄4 / 30 3⁄4	102
RE230L6**	28	26	46	0.92	21	18	29 7⁄8	22	30 3⁄4	24 1⁄8 / 30 5⁄8	108
RE240LN6	37	34	50	0.92	21	18	32	24 1⁄2	33 1⁄4	23 3⁄4 / 32 3⁄4	126
RE240L6**	38	35	54	0.93	21	18	32 5⁄8	24	33 1⁄2	24 1⁄8 / 33 3⁄8	140
RE250L6**	47	43	63	0.93	21	18	33 5⁄8	26	34 3⁄4	24 1⁄2 / 34 3⁄8	173

** Models include supplied insulation blanket (2" thick). Dimensions in charts above do not include blanket thickness.

For 10 year models, change suffix "6" to "10".

* Based on 4500W/4500W, Non-Simultaneous operation.

All models available with optional top T&P location (plugged).

† Exempt from ASHRAE 90.1b (current standard).

Uniform Energy Factor and First Hour Rating are based on the latest AHRI directory listings.

†† All models feature side T&P location and must specify top T&P when ordering. "D" dimension listed as side/top.

	Wattage Limitations for Simultaneous Operation					Wattage Limitations for Non-Simultaneous Operation				
	Voltage					Voltage				
	120V	208V	240V	277V	480V	120V	208V	240V	277V	480V
1500W / 1500W	yes	yes	yes	yes	yes	yes	yes	yes	yes	yes
2000W / 2000W	no	yes	yes	yes	yes	yes	yes	yes	yes	yes
2500W / 2500W	no	yes	yes	yes	yes	yes	yes	yes	yes	yes
3000W / 3000W	no	yes	yes	yes	yes	yes	yes	yes	yes	yes
3500W / 3500W	no	yes	yes	no	no	no	yes	yes	no	no
4000W / 4000W	no	yes	yes	yes	yes	no	yes	yes	yes	yes
4500W / 4500W	no	yes	yes	yes	yes	no	yes	yes	yes	yes
5000W / 5000W	no	yes	yes	yes	yes	no	yes	yes	yes	yes
5500W / 5500W	no	no	yes	no	no	no	yes	yes	no	no
6000W / 6000W	no	no	no	yes	yes	no	yes	yes	yes	yes

	Recovery▲ GPH Temperature Rise °F				
Wattage	60	80	90	100	120
1500W	10	8	7	6	5
2000W	14	10	9	8	7
2500W	17	13	11	10	9
3000W	21	15	14	12	10
3500W	24	18	16	14	12
4000W	28	21	18	16	14
4500W	31	23	21	19	15
5000W	34	26	23	21	17
5500W	38	29	25	23	19
6000W	41	31	28	25	21

▲ (GPH based on Non-Simultaneous operation, when Simultaneous operation the GPH will approximately double.)

© 2017, Bradford White Corporation. All Rights Reserved.

Residential Electric
Wall Hung Models

- Fully Automatic Controls
- Direct Heat Transfer With a Single Immersed Element
- Vitraglas® Lining
- 1" Non-CFC Foam Insulation
- Heavy Duty Wall Mounting Bracket
- Water Connections—3/4"
- Protective Magnesium Anode Rod
- Voltages Available—120V, 208V, 240V, 277V, 480V
- Single Phase Operation Only
- T&P Relief Valve

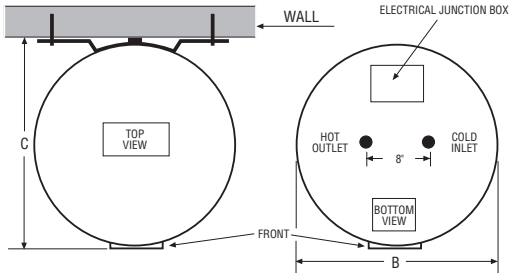

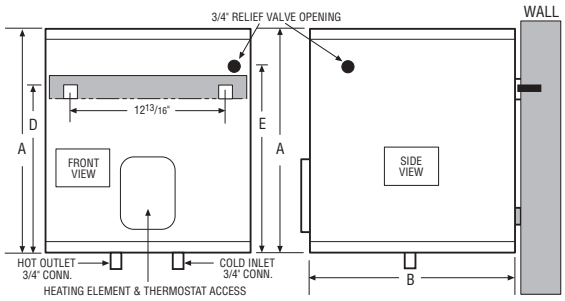

RE16UWV6

Copper Screw Type Immersion Element
(INCOLOY® type immersion element available upon request)

Wall Hung Models

DIMENSIONS IN INCHES

Meet or exceed ASHRAE 90.1b (current standard) C.E.C. Listed

ELECTRIC MODELS		Recovery 90°F Rise*		A	B	C	D	E	
Model Number	Gal. Cap.	Nat U.S. GPH	Nat Imp. GPH	Height	Jacket Dia.	Wall to Front	Height to Bracket	Floor to T&P Heater	Approx. Shipping Weight (lbs)
RE16WV6†	6	7	6	15¾	14	14⅝	11¾	11⅞	37
RE112WV6	12	7	6	16⅜	18	18⅝	12¾	12½	54
RE120WV6	19	7	6	24⅜	18	18⅝	18¼	21	67

† Maximum wattage at any voltage is 3000W.
For 10 year models, change suffix “6” to “10”.
Single element only.
* Based on 1500W operation.
Alternate Top Water Connections- 6 & 12 gallons.

Wattage Limitations	Voltage				
	120V	208V	240V	277V	480V
1500W	yes	yes	yes	yes	yes
2000W	yes	yes	yes	yes	yes
2500W	yes	yes	yes	yes	yes
3000W	yes	yes	yes	yes	yes
3500W	no	yes	yes	no	no
4000W	no	yes	yes	yes	yes
4500W	no	yes	yes	yes	yes
5000W	no	yes	yes	yes	yes
5500W	no	yes	yes	no	no
6000W	no	yes	yes	yes	yes

	Recovery GPH Temperature Rise °F				
Wattage	60	80	90	100	120
1500W	10	8	7	6	5
2000W	14	10	9	8	7
2500W	17	13	11	10	9
3000W	21	15	14	12	10
3500W	24	18	16	14	12
4000W	28	21	18	16	14
4500W	31	23	21	19	15
5000W	34	26	23	21	17
5500W	38	29	25	23	19
6000W	41	31	28	25	21

© 2017, Bradford White Corporation. All Rights Reserved.

Residential Electric
Utility Models

- Fully Automatic Controls
- Direct Heat Transfer with a Single Immersed Element
- Vitraglas® Lining
- 1" Non-CFC Foam Insulation
- Water Connections—3/4" NPT
- Alternate Top Water Connections
- Protective Magnesium Anode Rod
- Voltages Available—120V, 208V, 240V, 277V, 480V
- Single Phase Operation Only
- T&P Relief Valve
- Design Evaluated by ETL in Accordance with Part 280.707(d) of HUD Mobile Home Construction and Safety Standards for Energy Efficiency

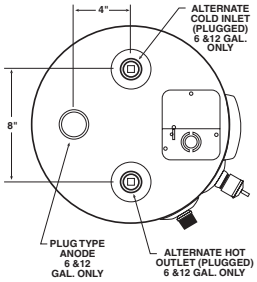

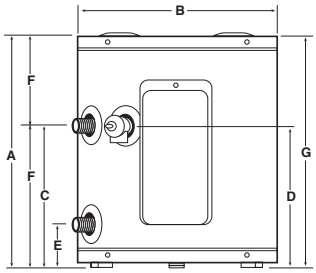

6, 12 & 20 Gallon Models

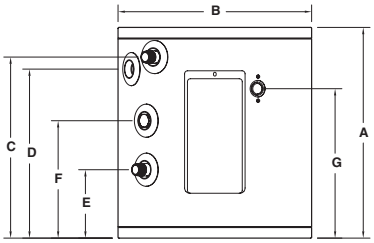

10 & 15 Gallon Models

RE112U6

Copper Screw Type Immersion Element
(INCOLOY® type immersion element available upon request)

Utility Models

DIMENSIONS IN INCHES

C.E.C. Listed

ELECTRIC MODELS		Recovery 90°F Rise*		A	B	C	D	E	F	G	
Model Number	Gal. Cap.	Nat U.S.* GPH	Nat Imp* GPH	Floor to Heater Top	Jacket Dia.	Floor to Hot Water Conn.	Floor to T&P Conn.	Floor to Cold Water Conn.	Floor to Anode Rod	Floor to Electrical Access	Approx. Shipping Weight (lbs)
RE16U6†	6	7	6	16½	14	10⅛	10⅛	3⅛	16½	16½	35
RE110U6	10	7	6	17½	16	15	14	5 11/16	9 11/16	12	44
RE112U6	12	7	6	16⅞	18	10¼	10¼	3	16½	16⅞	53
RE112T6†	12	7	6	27¾	14	21⅛	21⅛	3	27¾	27¾	48
RE115U6	15	7	6	20¼	18	17¾	16¾	6⅛	10⅛	12 11/16	58
RE120U6	19	7	6	24¾	18	18¼	18¼	3	10¼	24¾	65

† Maximum wattage at any voltage is 3000W.
For 10 year models, change suffix "6" to "10".
Single element only.
* Based on 1500W operation.

Wattage Limitations	Voltage				
	120V	208V	240V	277V	480V
1500W	yes	yes	yes	yes	yes
2000W	yes	yes	yes	yes	yes
2500W	yes	yes	yes	yes	yes
3000W	yes	yes	yes	yes	yes
3500W	no	yes	yes	no	no
4000W	no	yes	yes	yes	yes
4500W	no	yes	yes	yes	yes
5000W	no	yes	yes	yes	yes
5500W	no	yes	yes	no	no
6000W	no	yes	yes	yes	yes

	Recovery GPH Temperature Rise °F				
Wattage	60	80	90	100	120
1500W	10	8	7	6	5
2000W	14	10	9	8	7
2500W	17	13	11	10	9
3000W	21	15	14	12	10
3500W	24	18	16	14	12
4000W	28	21	18	16	14
4500W	31	23	21	19	15
5000W	34	26	23	21	17
5500W	38	29	25	23	19
6000W	41	31	28	25	21

© 2017, Bradford White Corporation. All Rights Reserved.

Residential Electric
Powerful Compact® Model

- Compact Design
- Fully Automatic Control
- Direct Heat Transfer with Immersed Element
- Vitraglas® Lining
- Non-CFC Insulation
- Water Connections—3/4" NPT
- Protective Magnesium Anode Rod
- T&P Relief Valve Opening

Optional Features:

- Wall Mounting Bracket
- Aluminum Anode Rod

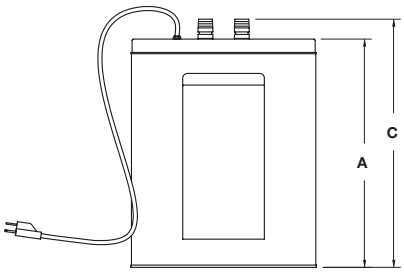

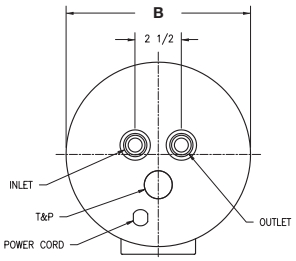

RE1-2U

Powerful Compact® Model

DIMENSIONS IN INCHES

Meet or exceed ASHRAE 90.1b (current standard) CEC Listed

ELECTRIC MODELS		Recovery 90°F Rise*		A	B	C	
Model Number	Gal. Cap.	Nat U.S. GPH	Nat Imp. GPH	Floor to Heater Top	Jacket Dia.	Floor to Water Conn.	Approx. Shipping Weight (lbs)
RE1-2U6	2	7	6	12 1/4	9 7/8	13 5/16	13

Includes a 4ft. cord with 3 prong grounded plug (20 amp circuit required).
For 10 year models, change suffix "6" to "10".
Single element only.
* Based on 1500W operation.
Only available as 120V / 1500W.

Copper Screw Type Immersion Element

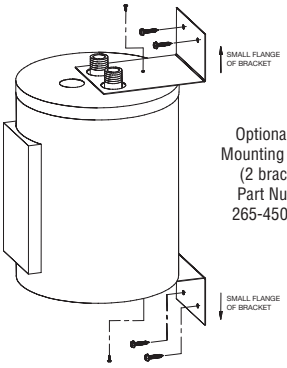

Optional Wall Mounting Bracket (2 brackets) Part Number 265-45018-00

Committed to American Manufacturing, Wholesale Distribution, and Professional Installation.

© 2017, Bradford White Corporation. All Rights Reserved.

Residential Electric Specialty Products

Instantaneous Water Heaters

- On Demand Hot Water—No delay
- Cut Energy Waste—Flow switch activates heater only on demand (no stand-by heat loss)
- Continuous Hot Water—No storage capacity to run out
- No T&P Relief Valve Needed—Check local codes
- Integral Flow Restrictor—Built-in to ensure proper temperature rise
- 10 Year Warranty on Heater Body/Element Assembly
- Easy Installation – Mounts on Wall – No Sweat Connections
- Ni Chrome Heating Element —A unique, patented flow path ensures optimum heat transfer and extended element life
- Durable Design— Reduces Calcification and Sedimentation
- Space Saving Installation—Compact size
- Field Serviceable Element —1 year warranty

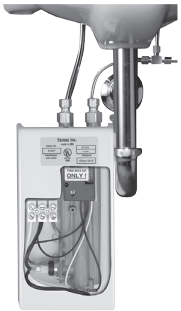

SINGLE POINT

THERMOSTATIC

FLOW CONTROLLED

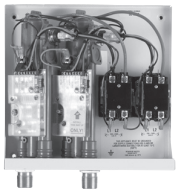

TWIN HEATING MODULE

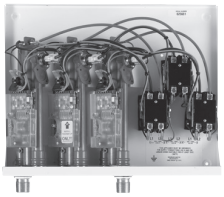

THERMOSTATIC THREE PHASE

Single Point Models (Single Phase)

DIMENSIONS IN INCHES

ELECTRIC

Model Number*	kW Rating	Voltage	AMPS	Temp.Rise °F 0.5 GPM	Recommended Wire Size
ES-3000-1-S-10	3.0	120	25.0	41°	10 AWG
ES-3500-1-S-10	3.5	120	29.0	48°	10 AWG
ES-3500-4-S-10	3.5	240	14.6	48°	12 AWG
ES-4100-2-S-10	4.1	208	19.7	56°	12 AWG
ES-4100-5-S-10	4.1	277	14.8	56°	14 AWG
ES-5500-4-S-10	5.5	240	22.9	37.5°**	10 AWG

* Additional voltages and wattages are available. For more information, please consult factory.
** Temp. Rise °F 1.0 GPM

Specifications
Dimensions: 10.75" x 5.25" x 2.875"
Weight: 3 lbs.
Materials:
Cover: ABS UL rated 94Vo.
Glass Reinforced "Fortron®" Heater Body and Ni Chrome Element
Color: White
- Element: Replaceable cartridge insert
- Pipe-Fittings: 3/8" compression at top of unit

Thermostatic Models (Single Phase)

DIMENSIONS IN INCHES

ELECTRIC

Model Number*	kW Rating	Voltage	AMPS	Temp. Rise °F 0.5 GPM	Temp. Rise °F 0.75 GPM	Temp. Rise °F 1.0 GPM	Temp. Rise °F 1.5 GPM	Temp. Rise °F 2.0 GPM	Recommended Wire Size
EFT-7500-4-S-10	7.5	240	32.0	—	68°	51°	34°	25°	8 AWG
EFT-9500-4-S-10	9.5	240	40.0	—	86°	65°	43°	32°	8 AWG

*Additional voltages and wattages are available. For more information, please consult factory.

Specifications
Dimensions: 10.75" x 5.25" x 2.875"
Weight: 3 lbs.
Materials:
Cover: ABS UL rated 94Vo.
Glass Reinforced "Fortron®" Heater Body and Ni Chrome Element
Color: White
- Standard temperature range 100°F-140°F.
- Element: Replaceable cartridge insert.
- Pipe-Fittings: 1/2" compression at bottom of unit.

U.L. Listed: E86887(M)

© 2017, Bradford White Corporation. All Rights Reserved.

Residential Electric Specialty Products

Instantaneous Water Heaters (continued)

Flow Controlled Models (Single Phase)

DIMENSIONS IN INCHES

ELECTRIC

Model Number*	kW Rating	Voltage	Current Per Phase	Temp. Rise °F 0.5 GPM	Temp. Rise °F 0.75 GPM	Temp. Rise °F 1.0 GPM	Temp. Rise °F 1.5 GPM	Temp. Rise °F 2.0 GPM	Recommended Wire Size
EFC-5500-4-S-10	5.5	240	23.0	75°	50°	38°	25°	18°	10 AWG
EFC-6500-4-S-10	6.5	240	27.0	88°	59°	44°	30°	22°	10 AWG
EFC-7500-4-S-10	7.5	240	32.0	—	68°	51°	34°	25°	8 AWG
EFC-8300-2-S-10	8.3	208	39.0	—	76°	57°	38°	29°	8 AWG
EFC-9500-4-S-10	9.5	240	40.0	—	86°	65°	43°	32°	8 AWG

*Additional voltages and wattages are available. For more information, please consult factory.

Specifications
Dimensions: 10.75" x 5.25" x 2.875"
Weight: 3 lbs.
Materials:
Cover: ABS UL rated 94Vo.
Glass Reinforced "Fortron®" Heater
Body and Ni Chrome Element
Color: White
• Standard temperature range 100°F-140°F.
• Element: Replaceable cartridge insert.
• Pipe-Fittings: 1/2" compression at bottom of unit.

Series Two - Thermostatic Models (Single Phase)

DIMENSIONS IN INCHES

ELECTRIC

Model Number*	kW Rating	Voltage	Current Per Phase	Temp. Rise °F 1.5 GPM	Temp. Rise °F 2.0 GPM	Temp. Rise °F 2.5 GPM	Temp. Rise °F 3.0 GPM	Recommended Wire Size
EFT-19000-4-D-10	19.0	240	2x40 Amps	87°	65°	52°	43°	8 AWG Per Module

*Additional voltages and wattages are available. For more information, please consult factory.

Specifications
Dimensions: 10" x 9" x 3"
Weight: 8 lbs.
Materials:
Cover: Enameled Steel.
Glass Reinforced "UDEL®" Heater
Body and Ni Chrome Element
Color: White
• Element: Dual replaceable cartridge inserts
• Pipe-Fittings: 3/4" NPT at bottom of unit.
U.S. Patent No.'s: 4,762,980 and 4,960,976

Series Three - Thermostatic Models (Single Phase)

DIMENSIONS IN INCHES

ELECTRIC

Model Number*	kW Rating	Voltage	Current Per Phase	Temp. Rise °F 1.5 GPM	Temp. Rise °F 2.0 GPM	Temp. Rise °F 2.5 GPM	Temp. Rise °F 3.0 GPM	Temp. Rise °F 4.0 GPM	Recommended Wire Size
EFT-28000-4-T-10	28.0	240	3x40 Amps	—	96°	76°	65°	47°	8 AWG Per Module

This unit must have 3 independent electrical circuits using correctly valued wire and 3 circuit breakers.
* Additional voltages and wattages are available. For more information, please consult factory.

Specifications
Single Phase Model Dimensions:
15.25" x 12.25" x 4.25"
Weight: 12 lbs.
Three Phase Model Dimensions:
15.25" x 12.25" x 4.25"
Weight: 15 lbs.
Materials:
Cover: Enameled Steel.
Glass Reinforced "UDEL®" Heater
Body and Ni Chrome Element
Color: White • Element: Triple replaceable cartridge inserts • Pipe-Fittings: 3/4" NPT at bottom of unit - EFT-28000-4-T-10. • 1/2" Compression at bottom of unit - EFTR Models. • U.S. Patent No.'s: 4,762,980 and 4,960,976

Series Three - Thermostatic Models (Three Phase)

DIMENSIONS IN INCHES

ELECTRIC

Model Number*	kW Rating	Voltage	Current Per Phase	Temp. Rise °F 1.5 GPM	Temp. Rise °F 2.0 GPM	Temp. Rise °F 2.5 GPM	Temp. Rise °F 3.0 GPM	Temp. Rise °F 3.5 GPM	Temp. Rise °F 4.0 GPM	Temp. Rise °F 5.0 GPM	Recommended Wire Size
EFTR-18000-6-T-10	18.0	480	21.7 Amps	82°	61°	49°	41°	35°	32°	25°	8 AWG
EFTR-24000-6-T-10	24.0	480	28.9 Amps	—	82°	65°	54°	47°	41°	34°	6 AWG
EFTR-32000-6-T-10	32.0	480	38.5 Amps	—	—	87°	73°	62°	55°	45°	4 AWG

* Additional voltages and wattages are available. For more information, please consult factory.

Voltage Identification Code For All Models

Voltage Code	Voltage
1	120
2	208
3	220
4	240
5	277
6	480

Example: EFT-28000-4-T-10
The 4 in the model number indicates 240 volt.

© 2017, Bradford White Corporation. All Rights Reserved.

Residential Solar
Double-Wall Gas Backup Models

- Heat Exchanger—Double-wall 1½" O.D. enamel coated (Vitraglas®) steel coil
- Bradford White ICON System™
  - Enhanced Performance
  - Advanced Temperature Control System
  - Intelligent Diagnostics
  - Separate Immersed Thermowell
- Defender Safety System® featuring the patented advanced ScreenLok® Technology flame arrestor design (except models above 75,000 BTU/Hr.)
  - Resettable Thermal Switch
  - Maintenance-Free
  - Sight Window
  - Pedestal Base
- Backup Low NOx Burner
- Sensor Wires for Solar Thermistor Connections
- Hydrojet® Total Performance System
- Vitraglas® Lining
- 3/4" NPT Female Connections on Front for Supply and Return
- 2" Non-CFC Foam Insulation
- Potable Water Connections—3/4" NPT true dielectric fittings
- Two Protective Anode Rods
- T&P Relief Valve
- Low Restrictive Brass Drain Valve
- Thermostatic Mixing Valve (ASSE Approved)

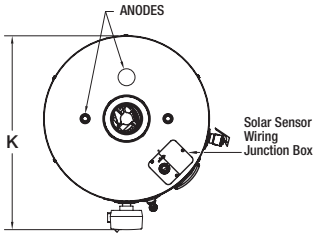

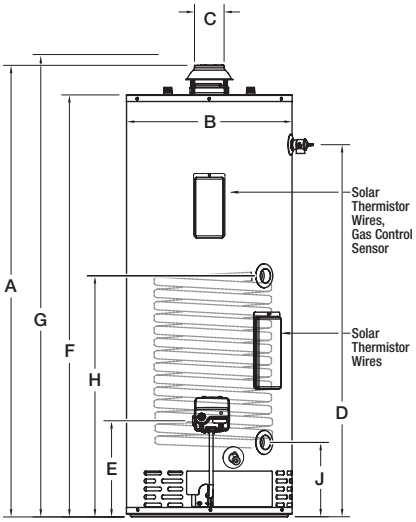

S-DW2-504T6FBN

EcoStor™ Double-Wall Gas Backup Models

DIMENSIONS IN INCHES

Meet or exceed ASHRAE 90.1b (current standard) C.E.C. Listed
80% Recovery Efficiency

NATURAL GAS MODELS				A	B	C	D	E	F	G	H	J	K	
Model Number	Gal. Cap.	Input BTU/Hr.	GPH Recovery 90°F Rise*	Floor to Flue Conn.	Jacket Dia.	Vent Size	Floor to T&P Conn.	Floor to Gas Conn.	Floor to Heater Top	Floor to Water Conn.	Floor to Solar Collector Supply	Floor to Solar Collector Return	Depth	Approx. Shipping Weight (lbs)
S-DW2-504T6FBN	45	65,000	69	59¼	22	4	50	11⅜	56	60	32¼	10⅛	26	223
S-DW2-65T6FBN	60	65,000	69	63	24	4	53½	11⅜	59½	63¼	32¼	10⅛	28	264
S-DW2-75S6BN	70	76,000	82	62⅜	26	4	52	14⅜	59	62¾	34⅝	12½	30⅜	306

* Based on manufacturer's rated recovery efficiency.
Propane models feature a Titanium Stabilized Stainless Steel propane burner. For propane (LP) models change suffix "BN" to "SX".

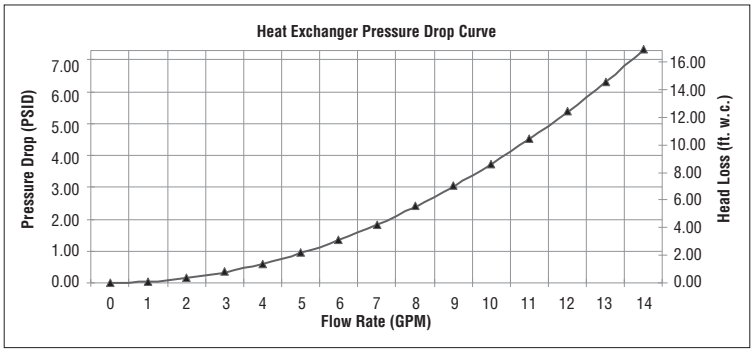

LP GAS MODELS	Input BTU/Hr.	GPH Rec. 90°F Rise
S-DW2-504T6FSX	61,000	65
S-DW2-65T6FSX	63,000	67
S-DW2-75S6SX	76,000	82

For above models please note recovery changes for LP.

© 2017, Bradford White Corporation. All Rights Reserved.

Residential Solar

EcoStor2™ TTW® Power Vent Double-Wall Gas Backup Models

- Heat Exchanger—Double-wall 1½" O.D. enamel coated (Vitraglas®) steel coil
- Bradford White ICON System™
  - Enhanced Performance
  - Advanced Temperature Control System
  - Intelligent Diagnostics
  - Separate Immersed Thermowell
- Defender Safety System® featuring the patented advanced ScreenLok® Technology flame arrestor design (except models above 75,000 BTU/Hr.)
  - Resettable Thermal Switch
  - Maintenance-Free
  - Sight Window
  - Pedestal Base
- Backup Low NOx Burner
- Sensor Wires for Solar Thermistor Connections
- Horizontal and Vertical Venting
- High Efficiency Blower
  - 10 ft. Power Cord Included (120 VAC)
- Hydrojet® Total Performance System
- Vitraglas® Lining
- Supply and Return Connections—3⁄4" NPT
- 2" Non-CFC Foam Insulation
- Potable Water Connections—3⁄4" NPT true dielectric fittings
- Two Protective Anode Rods
- T&P Relief Valve
- Low Restrictive Brass Drain Valve
- S-DW2-TW-75 Is Not FVIR Compliant
- Thermostatic Mixing Valve (ASSE Approved)

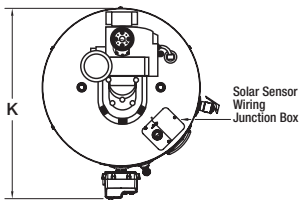

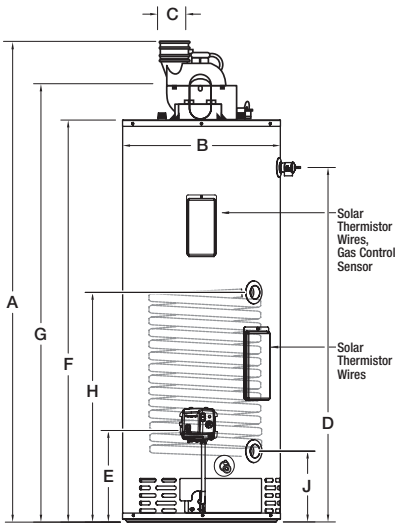

S-DW2-TW-65T6FBN

EcoStor2™ TTW® Power Vent Double-Wall Gas Backup Models

DIMENSIONS IN INCHES

Meet or exceed ASHRAE 90.1b (current standard) C.E.C. Listed
80% Recovery Efficiency

NATURAL GAS MODELS				A	B	C	D	E	F	G	H	J	K	
Model Number	Gal. Cap.	Input BTU/Hr.	GPH Recovery 90°F Rise*	Floor to Flue Conn.	Jacket Dia.	Vent Size	Floor to T&P Conn.	Floor to Gas Conn.	Floor to Heater Top	Floor to Water Conn.	Floor to Solar Collector Supply	Floor to Solar Collector Return	Depth	Approx. Shipping Weight (lbs)
S-DW2-TW-50T6FBN	45	67,000	72	59¼	22	3 or 4	50	11⅜	56	60	32¼	10⅛	26	247
S-DW2-TW-65T6FBN	60	70,000	75	63	24	3 or 4	53½	11⅜	59½	63¼	32¼	10⅛	28	281
S-DW2-TW-75T6BN	70	76,000	82	62⅜	26	4	52	14⅜	59	62¾	34⅝	12½	30⅜	336

* Based on manufacturer's rated recovery efficiency.
Propane models feature a Titanium Stabilized Stainless Steel propane burner. For propane (LP) models change suffix "BN" to "SX".

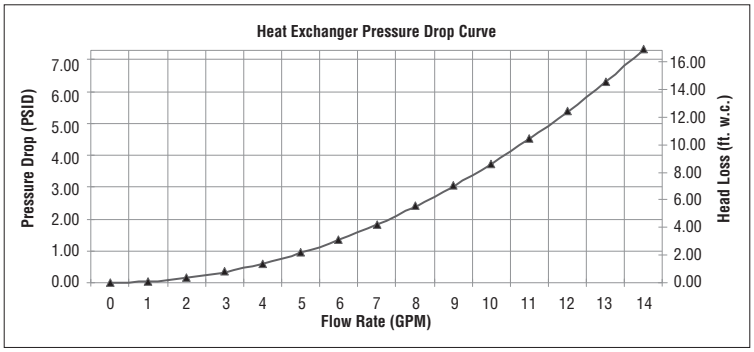

LP GAS MODELS	Input BTU/Hr.	GPH Rec. 90°F Rise
S-DW2-TW-50T6FSX	60,000	65
S-DW2-TW-65T6FSX	63,000	68
S-DW2-TW-75T6SX	75,500	81

For above models please note recovery changes for LP.

S-DW2-TW-50T6FBN S-DW2-TW-65T6FBN S-DW2-TW-75T6BN		3" Vent Pipe	4" Vent Pipe
Max. Equivalent Length		60 ft.**	180 ft.
Min. Equivalent Length		7 ft.	15 ft.
Number	1	55 ft.	175 ft.
of	2	50 ft.	170 ft.
90° Elbows	3	45 ft.	165 ft.

Subtract 5ft. for each additional 90° elbow.
** S-DW2-TW-75 Max. 3" vent length is 50ft.

© 2017, Bradford White Corporation. All Rights Reserved.

Residential Solar
EcoStor™ Open Loop Gas Backup Models

- Bradford White ICON System™
  - Enhanced Performance
  - Advanced Temperature Control System
  - Intelligent Diagnostics
  - Separate Immersed Thermowell
- Defender Safety System® featuring the patented advanced ScreenLok® Technology flame arrestor design (except models above 75,000 BTU/Hr.)
  - Resettable Thermal Switch
  - Maintenance-Free
  - Sight Window
  - Pedestal Base
- Backup Low NOx Burner
- Hydrojet® Total Performance System
- Vitraglas® Lining
- 3/4" NPT Solar Collector Supply and Return Connections (No Internal Heat Exchanger)
- 2" Non-CFC Foam Insulation
- Potable Water Connections—3/4" NPT (65 gallon), 1" NPT (75 gallon) and 1¼" NPT (100 gallon) true dielectric fittings
- Protective Anode Rods—65 and 75 gallon models (1 Anode Rod), 100 gallon Model (2 Anode Rods)
- T&P Relief Valve
- Low Restrictive Brass Drain Valve
- Thermostatic Mixing Valve (ASSE Approved)

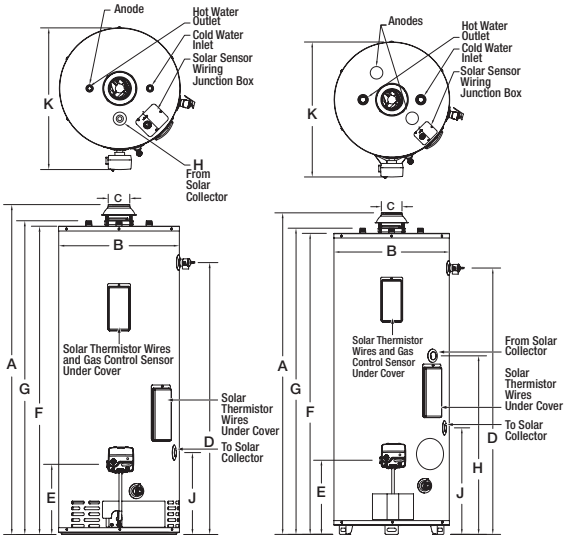

65 /75 Gallon Capacity

100 Gallon Capacity

S-2-65T6FBN

EcoStor™ Open Loop Gas Backup Models

DIMENSIONS IN INCHES

Meet or exceed ASHRAE 90.1b (current standard) C.E.C. Listed
80% Recovery Efficiency

NATURAL GAS MODELS				A	B	C	D	E	F	G	H	J	K	
Model Number	Gal. Cap.	Input BTU/Hr.	GPH Recovery 90°F Rise*	Floor to Flue Conn.	Jacket Dia.	Vent Size	Floor to T&P Conn.	Floor to Gas Conn.	Floor to Heater Top	Floor to Water Conn.	Floor to Solar Collector Supply	Floor to Solar Collector Return	Depth	Approx. Shipping Weight (lbs)
S-2-65T6FBN	65	65,000	69	63	24	4	53½	11⅜	59½	60¼	60¼	10⅛	28	215
S-2-75S6BN	75	76,000	82	62⅜	26	4	52	14⅛	59	59¾	59¾	12½	30⅜	250
S-2-100T6BN	100	85,000	92	63 11/16	28¼	4	39¼	14¼	65½	67½	38¾	17½	32¼	400

* Based on manufacturer's rated recovery efficiency.
Propane models feature a Titanium Stabilized Stainless Steel propane burner. For propane (LP) models change suffix "BN" to "SX".

LP GAS MODELS	Input BTU/Hr.	GPH Rec. 90°F Rise
S-2-65T6FSX	63,000	67
S-2-75S6SX	76,000	82
S-2-100T6SX	88,000	95

For above models please note recovery changes for LP.

© 2017, Bradford White Corporation. All Rights Reserved.

Residential Solar

EcoStor™ TTW® Power Vent Open Loop Gas Backup Models

- 3/4" NPT Solar Collector Supply and Return Connections (No Internal Heat Exchanger)
- Bradford White ICON System™
  - Enhanced Performance
  - Advanced Temperature Control System
  - Intelligent Diagnostics
  - Separate Immersed Thermowell
- Defender Safety System® featuring the patented advanced ScreenLok® Technology flame arrestor design (except models above 75,000 BTU/Hr.)
  - Flammable Vapor Sensor
  - Maintenance-Free
  - Sight Window
  - Pedestal Base
- Backup Low NOx Burner
- Sensor Wires for Solar Thermistor Connections
- Horizontal and Vertical Venting
- High Efficiency Blower
  - 10 ft. Power Cord Included (120 VAC)
- Hydrojet® Total Performance System
- Vitraglas® Lining
- 2" Non-CFC Foam Insulation
- Potable Water Connections— 3⁄4" NPT true dielectric fittings
- Two Protective Anode Rods
- T&P Relief Valve
- Low Restrictive Brass Drain Valve
- Thermostatic Mixing Valve (ASSE Approved)

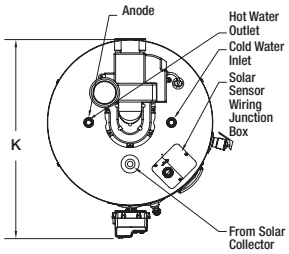

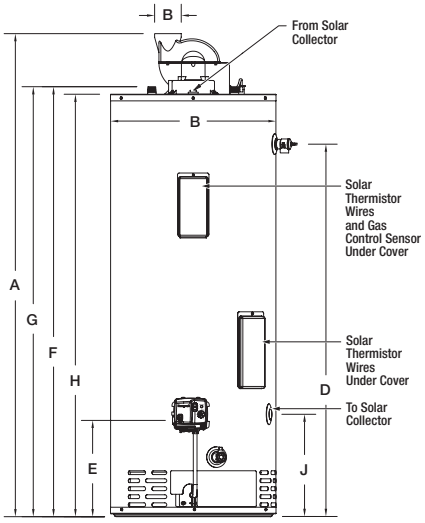

S-2-TW65T6FBN

EcoStor™ TTW® Power Vent Open Vent Gas Backup Models

DIMENSIONS IN INCHES

Meet or exceed ASHRAE 90.1b (current standard) C.E.C. Listed
80% Recovery Efficiency

NATURAL GAS MODELS				A	B	C	D	E	F	G	H	J	K	
Model Number	Gal. Cap.	Input BTU/Hr.	GPH Recovery 90°F Rise*	Floor to Flue Conn.	Jacket Dia.	Vent Size	Floor to T&P Conn.	Floor to Gas Conn.	Floor to Heater Top	Floor to Water Conn.	Floor to Solar Collector Supply	Floor to Solar Collector Return	Depth	Approx. Shipping Weight (lbs)
S-2-TW65T6FBN	65	70,000	75	63	24	3	53½	11⅜	59½	60¼	32¼	10⅛	28	225
S-2-TW75T6BN	75	76,000	82	62⅜	26	3	52	14⅛	59	59¾	34⅝	12½	30⅜	260

* Based on manufacturer's rated recovery efficiency.
Propane models feature a Titanium Stabilized Stainless Steel propane burner. For propane (LP) models change suffix "BN" to "SX".
120 V.A.C. required for power venting.
120 V.A.C. 60HZ 3.1 Amperes.

LP GAS MODELS	Input BTU/Hr.	GPH Rec. 90°F Rise
S-2-TW65T6FSX	63,000	68
S-2-TW75T6SX	75,500	81

For above models please note recovery changes for LP.

S-2-TW65T6FBN S-2-TW75T6BN		3" Vent Pipe	4" Vent Pipe
Max. Equivalent Length		60 ft.**	180 ft.
Min. Equivalent Length		7 ft.	15 ft.
Number	1	55 ft.	175 ft.
of	2	50 ft.	170 ft.
90° Elbows	3	45 ft.	165 ft.

Subtract 5ft. for each additional 90° elbow.
** S-2-TW-75 Max. 3" vent length is 50 ft. (15.24 m).

© 2017, Bradford White Corporation. All Rights Reserved.

Residential Solar

EcoStor2™ SC Ultra Low NOx Double-Wall Gas Backup Models

- Heat Exchanger—Double-wall 1½" O.D. enamel coated (Vitraglas®) steel coil
- Bradford White ICON System™
  - Enhanced Performance
  - Advanced Temperature Control System
  - Intelligent Diagnostics
  - Separate Immersed Thermowell
- Eco-Defender Safety System® featuring the patented advanced ScreenLok® Technology flame arrestor design
  - Digital Thermal Sensor
  - Maintenance-Free
  - Sight Window
  - Pedestal Base
- Backup Ultra Low NOx Burner
- Sensor Wires for Solar Thermistor Connections
- Hydrojet® Total Performance System
- Vitraglas® Lining
- Supply and Return Connections—3⁄4" NPT
- 2" Non-CFC Foam Insulation
- Potable Water Connections—3⁄4" NPT true dielectric fittings
- Two Protective Anode Rods
- T&P Relief Valve
- Low Restrictive Brass Drain Valve
- Complies with the Latest Ultra-Low NOx Requirements (10ng / J NOx limit)
- Thermostatic Mixing Valve (ASSE Approved)

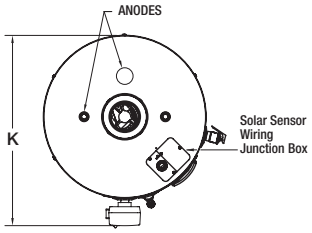

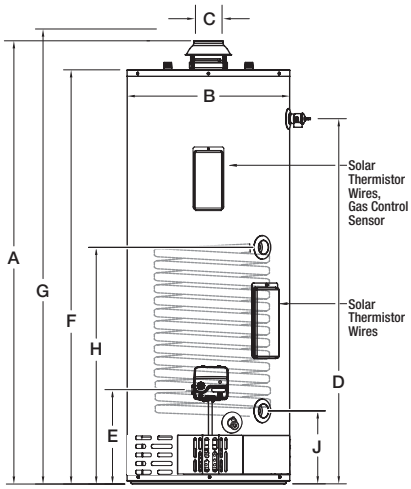

S-DW4-U5036FRN

EcoStor2™ Ultra Low NOx Double-Wall Gas Backup Models

DIMENSIONS IN INCHES

Meet or exceed ASHRAE 90.1b (current standard) C.E.C. Listed
80% Recovery Efficiency

NATURAL GAS MODELS				A	B	C	D	E	F	G	H	J	K	
Model Number	Gal. Cap.	Input BTU/Hr.	GPH Recovery 90°F Rise*	Floor to Flue Conn.	Jacket Dia.	Vent Size	Floor to T&P Conn.	Floor to Gas Conn.	Floor to Heater Top	Floor to Water Conn.	Floor to Solar Collector Supply	Floor to Solar Collector Return	Depth	Approx. Shipping Weight (lbs)
S-DW4-U5036FRN	45	40,000	43	59¼	22	3	50	11⅝	56¼	60	32¼	10⅛	26	233
S-DW2-U65T6FRN	60	55,000	57	63	24	4	53½	11⅝	59½	63¼	32¼	10⅛	28	272

* Based on manufacturer's rated recovery efficiency.
Complies with the latest ultra-low NOx requirement (10 ng/J NOx limit).
Available in Natural Gas Only.

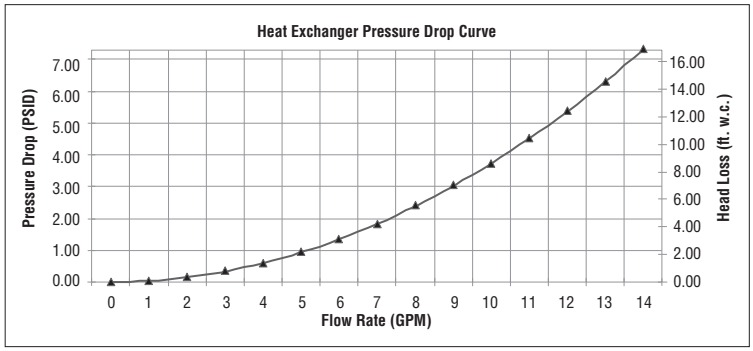

Committed to American Manufacturing, Wholesale Distribution, and Professional Installation.

© 2017, Bradford White Corporation. All Rights Reserved.

Residential Solar

EcoStor™ Dual Coil Heat Exchanger Backup Models

- Dual Coil Design—A single-wall heat exchanger is located in the upper portion of the tank. A double wall heat exchanger is located in the lower portion of the tank
- Applications—Dual heat exchangers located inside the tank may be connected to a variety of different heating systems
- Sensor Wires for Solar Thermistor Connections
- Hydrojet® Total Performance System
- Vitraglas® Lining
- Supply and Return Connections—1" NPT upper coil, 3⁄4" NPT lower coil
- 2" Non-CFC Foam Insulation
- Potable Water Connections—3⁄4" NPT true dielectric fittings extend water heater life and eases installation
- Two Protective Anode Rods
- T&P Relief Valve
- Low Restrictive Brass Drain Valve
- Thermostatic Mixing Valve (ASSE Approved)

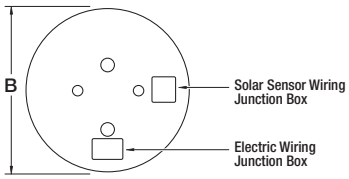

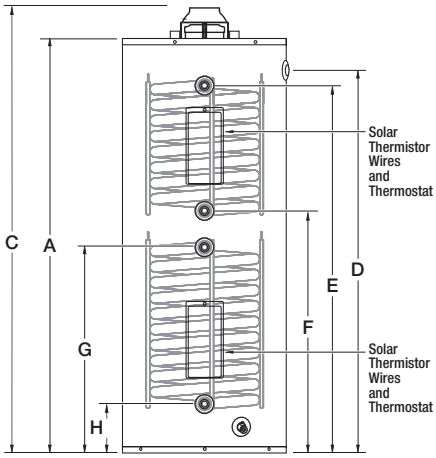

S-DC-DW2-55R6SW

EcoStor™ Dual Coil Heat Exchanger Backup Models

DIMENSIONS IN INCHES

Meet or exceed ASHRAE 90.1b (current standard)

SOLAR MODELS		A	B	C	D	E	F	G	H	
Model Number	Gal. Cap.	Floor to Heater Top	Jacket Dia.	Floor to Water Conn.	Floor to T&P Conn.	Floor to Upper Coll. Supply	Floor to Upper Coll. Return	Floor to Lower Coll. Supply	Floor to Lower Coll. Return	Approx. Shipping Weight (lbs)
S-DC-DW2-55R6SW	55	59 1/4	22	62 3/4	53	56	37 1/2	27 1/2	5 3/8	282
S-DC-DW2-70R6SW	70	59 1/4	24	62 3/4	53	56	37 1/2	27 1/2	5 3/8	313
S-DC-DW2-110R6SW	110	62 1/2	28 1/4	66	55 3/4	57 3/4	39 1/4	27 1/2	5 3/8	442

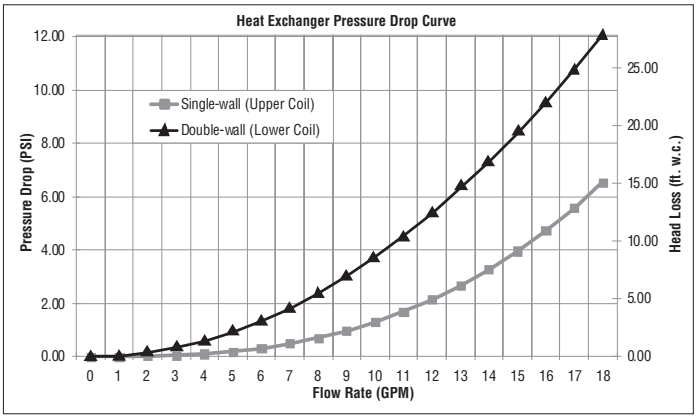

© 2017, Bradford White Corporation. All Rights Reserved.

Residential Solar

EcoStor™ SC Single-Wall Electric Backup Models

- Heat Exchanger—Single-wall 1½" O.D. enamel coated (Vitraglas®) steel coil
- Supplied Sensor Wires for Solar Thermistor Connections
- Integrated Mixing Device
- Element Backup—Single or dual 4500W heating elements - Optional 5500W
- Hydrojet® Total Performance System
- Vitraglas® Lining
- 1" NPT Female Connections on Front for Supply and Return
- Potable Water Connections—3/4" NPT true dielectric fittings
- 2" Non-CFC Foam Insulation
- Two Protective Anode Rods
- T&P Relief Valve
- Low Restrictive Brass Drain Valve
- Thermostatic Mixing Valve (ASSE Approved)

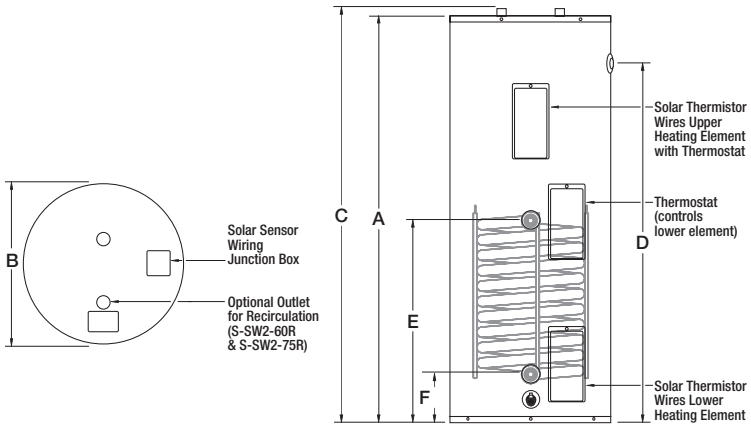

S-SW2-60R6DS

EcoStor™ Single-Wall Electric Backup Models

DIMENSIONS IN INCHES

Meet or exceed ASHRAE 90.1b (current standard)

SOLAR MODELS		A	B	C	D	E	F	
Model Number	Gal. Cap.	Floor to Heater Top	Jacket Dia.	Floor to Water Conn.	Floor to T&P Conn.	Floor to Solar Coll. Supply	Floor to Solar Coll. Return	Approx. Shipping Weight (lbs)
S-SW2-60R6DS	60	59¼	22	63¼	53	29½	7⅜	210
S-SW2-75R6DS	75	59¼	24	63¼	53	29½	7⅜	236
S-SW2-115R6DS	115	62¾	28¼	66¾	55¾	29½	7⅜	340

For single element models change “D” to “S”.
(Ex. S-SW2-60R6**S**S)

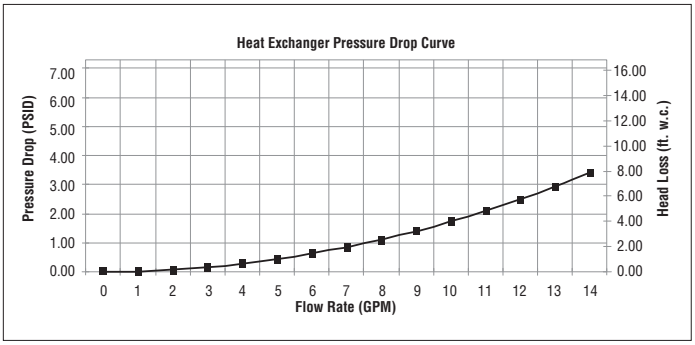

Electric Backup Water Heating Ratings

Model Number	First Hour Supply (Gal.) Single Element	First Hour Supply (Gal.) Dual Element	Standby Heat Loss Rating (°F/Hr.)
S-SW2-60R6DS	46	84	1.1
S-SW2-75R6DS	53	97	0.9
S-SW2-115R6DS	83	124	0.7

© 2017, Bradford White Corporation. All Rights Reserved.

Residential Solar

EcoStor 2™ Double-Wall Electric Backup Models

- Heat Exchanger—Double-wall 1½" O.D. enamel coated (Vitraglas®) steel coil
- Supplied Sensor Wires for Solar Thermistor Connections
- Element Backup—Single or dual 4500W heating elements - Optional 5500W
- Hydrojet® Total Performance System
- Vitraglas® Lining
- 3/4" NPT Female Connections on Front for Supply and Return
- Potable Water Connections—3/4" NPT true dielectric fittings
- 2" Non-CFC Foam Insulation
- Two Protective Anode Rods
- T&P Relief Valve
- Low Restrictive Brass Drain Valve
- Thermostatic Mixing Valve (ASSE Approved)

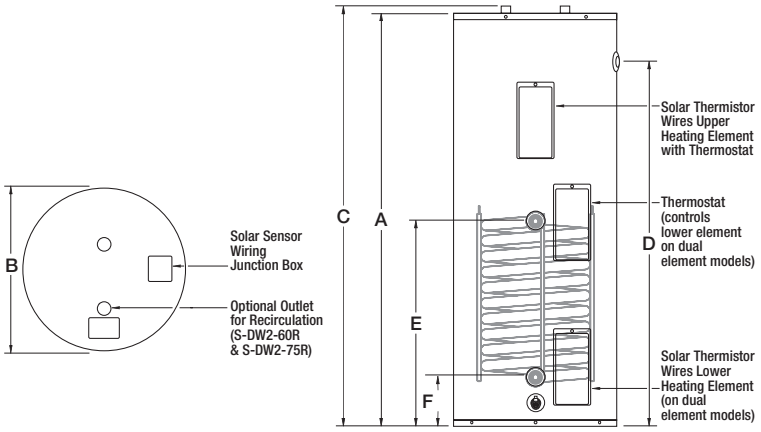

S-DW2-60R6DS

EcoStor2™ Double-Wall Electric Backup Models

DIMENSIONS IN INCHES

Meet or exceed ASHRAE 90.1b (current standard)

SOLAR MODELS		A	B	C	D	E	F	
Model Number	**Gal. Cap.**	**Floor to Heater Top**	**Jacket Dia.**	**Floor to Water Conn.**	**Floor to T&P Conn.**	**Floor to Solar Coll. Supply**	**Floor to Solar Coll. Return**	**Approx. Shipping Weight (lbs)**
S-DW2-60R6DS	60	59 1/4	22	63 1/4	53	29 1/2	7 3/8	217
S-DW2-75R6DS	75	59 1/4	24	63 1/4	53	29 1/2	7 3/8	241
S-DW2-115R6DS	115	62 3/4	28 1/4	66 3/4	55 3/4	29 1/2	7 3/8	345

For single element models change "D" to "S".
(Ex. S-DW2-60R6**S**S)

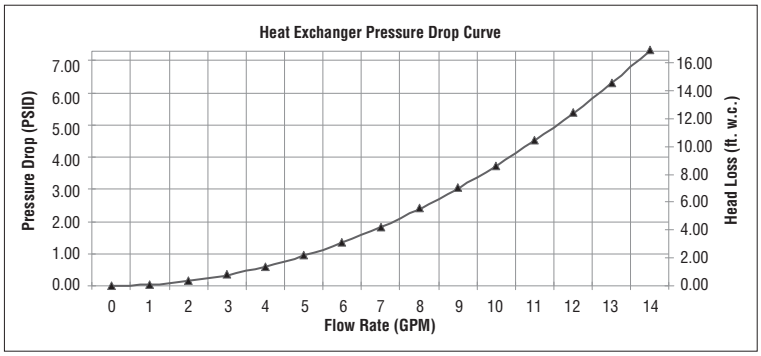

Electric Backup Water Heating Ratings

Model Number	First Hour Supply (Gal.) Single Element	First Hour Supply (Gal.) Dual Element	Standby Heat Loss Rating (°F/Hr.)
S-DW2-60R6DS	46	84	1.1
S-DW2-75R6DS	53	97	0.9
S-DW2-115R6DS	83	124	0.7

© 2017, Bradford White Corporation. All Rights Reserved.

Residential Solar

Solar Saver® Electric Backup Models

- Vitraglas® Lining
- Hydrojet® Total Performance System
- Backup Element—4500W element provides heat only when solar energy does not satisfy demand
- Fully Automatic Controls—Fast acting surface-mount thermostat
- Top of Tank Access for Wiring and Water Connections
- Pre-Wired Sensor Lead
- Thermal Feet
- Water Connections—3/4" NPT true dielectric fittings
- 2" Non-CFC foam insulation
- Protective Magnesium Anode Rod
- Consult Factory for Other Wattages
- T&P Relief Valve
- Low Restrictive Brass Drain Valve

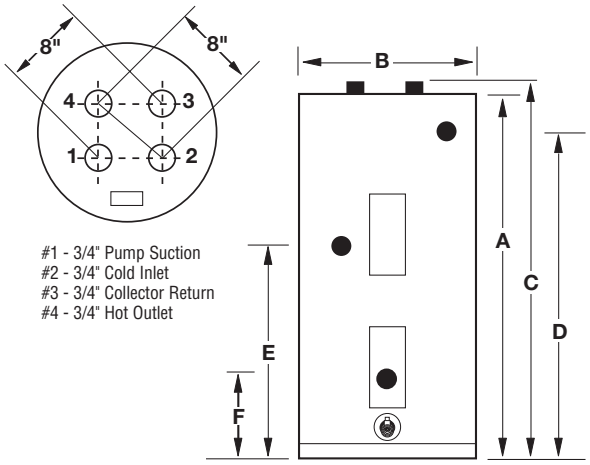

#1 - 3/4" Pump Suction
#2 - 3/4" Cold Inlet
#3 - 3/4" Collector Return
#4 - 3/4" Hot Outlet

MS80R6SS

Solar Saver® Electric Backup Models

DIMENSIONS IN INCHES

Meet or exceed ASHRAE 90.1b (current standard)

SOLAR MODELS		A	B	C	D	E	F	
Model Number	**Gal. Cap.**	**Floor to Heater Top**	**Jacket Dia.**	**Floor to Water Conn.**	**Floor to T&P Conn.**	**Fl. to Alt. Coll. Return Conn.**	**Fl. to Alt. Coll. Supply Conn.**	**Approx. Shipping Weight (lbs)**
MS65R6SS	65	59	22	60	52½	—	—	168
MS80R6SS†	80	59	24	60	52½	38	7⅞	210
MS120R6SS†	119	62½	28	63½	56	38¼	7⅞	310

NOTE: Suffix letter "S" denotes single element and surface mounted thermostat.
If requirements are for storage only, do not use element connections.
Second suffix letter "S" denotes Screw-Type Element. Meets California Energy Commission requirements.
† Models offer additional pump suction and collector return connections.

© 2017, Bradford White Corporation. All Rights Reserved.

Residential Gas

Combi1™ Single-Wall Atmospheric Models

- Defender Safety System® featuring the patented advanced ScreenLok® Technology flame arrestor design (50 gallon model only)
  - Resettable Thermal Switch
  - Maintenance-Free
  - Sight Window
  - Pedestal Base

All Combi1™ Models Feature:

- Bradford White ICON System™
  - Enhanced Performance
  - Advanced Temperature Control System
  - Intelligent Diagnostics
  - Separate Immersed Thermowell
- Heat Exchanger—Single-wall 1½" O.D. enamel coated (Vitraglas®) Steel Coil
- Provides Domestic Hot Water and Space Heating in One System
- Low Heat Exchanger Head Loss —Up to 10 GPM flow, with less than 5 ft. of Head Loss
- Vitraglas® Lining
- Hydrojet® Total Performance System
- Water Connections – 3/4" NPT true dielectric fittings
- 1" Front NPT Supply and Return Connections
- 2" Non-CFC Foam Insulation
- Two Protective Anode Rods
- T&P Relief Valve
- Low Restrictive Brass Drain Valve
- Thermostatic Mixing Valve (ASSE Approved)

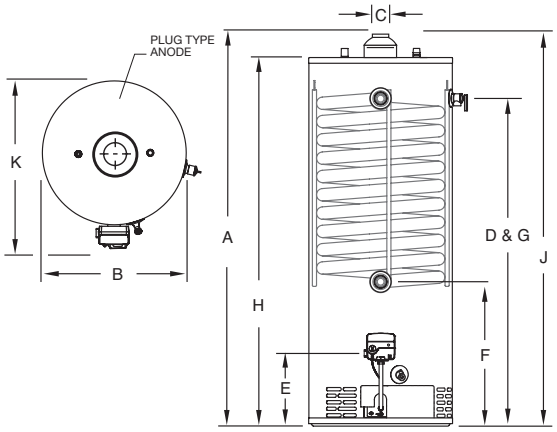

C-SW2-504T10FBN

Combi1™ Atmospheric Vent Model

DIMENSIONS IN INCHES

Meet or exceed ASHRAE 90.1b (current standard) C.E.C. Listed
80% Recovery Efficiency

NATURAL GAS MODELS				A	B	C	D	E	F	G	H	J	K	
Model Number	Gal. Cap.	Input BTU/Hr.	GPH Recovery 90°F Rise*	Floor to Flue Conn.	Jacket Dia.	Vent Size	Floor to T&P Conn.	Floor to Gas Conn.	Floor to Exchanger Inlet	Floor to Exchanger Outlet	Floor to Top of Heater	Floor to Top Water Conn.	Depth	Approx. Shipping Weight (lbs)
C-SW2-504T10FBN	45	65,000	70	59¼	22	4	50	13	31½	50	56⅜	60⅜	24½	236
C-SW2-75T10BN	72	76,000	81	62¼	26	4	51¾	13⅞	29⅝	51¾	59	63	30⅜	292

All propane models feature a Titanium Stabilized Stainless Steel burner. For propane (LP) models change suffix "BN" to "SX".

* Based on manufacturer's rated recovery efficiency.
CAEF is .55 and CAAFLUE % is 80.0.

LP GAS MODELS	Input BTU/Hr.	GPH Rec. 90°F Rise
C-SW2-504T10FSX	61,000	66
C-SW2-75T10SX	76,000	81

For above models please note recovery changes for LP.

Heat Exchanger Values*

	C-SW2-504T C-SW2-75T	C-SW2-504T		C-SW2-75T	
Supply Temperature	140°F	120°F	100°F	120°F	100°F
Return Temperature	120°F	100°F	80°F	100°F	80°F
Differential	20°F	20°F	20°F	20°F	20°F
Flow Rate	4.1 GPM	4.6 GPM	4.6 GPM	5.6 GPM	5.6 GPM
Net Output	35,500 BTU/Hr.	39,500 BTU/Hr.	39,500 BTU/Hr.	47,500 BTU/Hr.	47,500 BTU/Hr.

* These values were obtained using 180°F stored tank temperature.
Net Output is the space heating capacity based on normal piping and pickup allowance of 15%.
Actual values may vary based on circulator flow rate, number of zones, water and space heating demands.
Numbers subject to change.

Heat Exchanger Head Loss

GPM	2	5	8	10	12
Feet of Head Loss	0.03	0.20	0.51	0.80	1.15

© 2017, Bradford White Corporation. All Rights Reserved.

Residential Gas

Combi1™ TTW® Single-Wall Power Vent Models

- Defender Safety System® featuring the patented advanced ScreenLok® Technology flame arrestor design (50 gallon model only)
  - Resettable Thermal Switch
  - Maintenance-Free
  - Sight Window
  - Pedestal Base

All Combi1™ TTW® Models Feature:

- Bradford White ICON System™
  - Enhanced Performance
  - Advanced Temperature Control System
  - Intelligent Diagnostics
  - Separate Immersed Thermowell
- Heat Exchanger—Single-wall 1½" O.D. enamel coated (Vitraglas®) steel
- Provides Domestic Hot Water and Space Heating in One System
- Low Heat Exchanger Head Loss—Up to 10 GPM flow, with less than 5 ft. of Head Loss
- Vitraglas® Lining
- Power Vented
  - 10 ft. Power Cord Included (120 VAC)
- Hydrojet® Total Performance System
- Horizontal and Vertical Venting
- Water Connections—3/4" NPT true dielectric fittings
- 1" NPT Front Supply and Return Connections
- 2" Non-CFC Foam Insulation
- Two Protective Anode Rods
- T&P Relief Valve
- Low Restrictive Brass Drain Valve
- Thermostatic Mixing Valve (ASSE Approved)

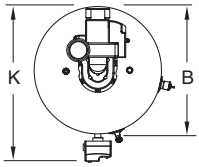

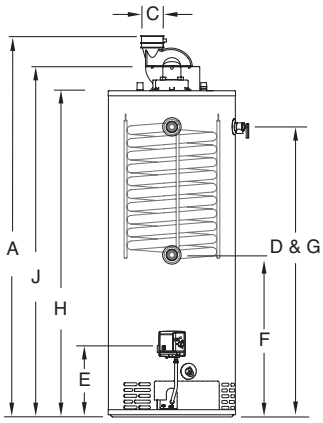

C-SW2-TW50T10FBN

Combi1™ TTW® Single-Wall Power Vent Models

DIMENSIONS IN INCHES

Meet or exceed ASHRAE 90.1b (current standard) C.E.C. Listed 80% Recovery Efficiency

NATURAL GAS MODELS				A	B	C	D	E	F	G	H	J	K	
Model Number	**Gal. Cap.**	**Input BTU/Hr.**	**GPH Recovery 90°F Rise***	**Floor to Vent Conn.**	**Jacket Dia.**	**Vent Size**	**Floor to T&P Conn.**	**Floor to Gas Conn.**	**Floor to Exchanger Inlet**	**Floor to Exchanger Outlet**	**Floor to Top of Heater**	**Floor to Top Water Conn.**	**Depth**	**Approx. Shipping Weight (lbs)**
C-SW2-TW50T10FBN	45	67,000	72	65 7/8	22	3 or 4	50 1/8	11 3/4	31 1/2	50	56 3/8	60 3/4	26 3/4	243
C-SW2-TW75T10BN	72	76,000	82	68 3/8	26	3 or 4	53	15	34 1/2	53	60 1/4	64 1/4	31	313

All propane models feature a Titanium Stabilized Stainless Steel burner. For propane (LP) models change suffix "BN" to "SX".

* Based on manufacturer's rated recovery efficiency.

120 V.A.C Required for Power Venting / 120 V.A.C., 60HZ, 3.1 Amperes.

LP GAS MODELS	Input BTU/Hr.	GPH Rec. 90°F Rise
C-SW2-TW50T10FSX	60,000	65
C-SW2-TW75T10SX	75,500	81

For above models please note recovery changes for LP.

Heat Exchanger Values*

Supply Temperature	140°F	120°F	100°F
Return Temperature	120°F	100°F	80°F
Differential	20°F	20°F	20°F
Flow Rate (TW50)	4.1 GPM	4.6 GPM	4.6 GPM
Net Output (TW50)	35,000 BTU/Hr.	39,500 BTU/Hr.	39,500 BTU/Hr.
Flow Rate (TW75)	4.1 GPM	5.6 GPM	5.6 GPM
Net Output (TW75)	35,000 BTU/Hr.	47,500 BTU/Hr.	47,500 BTU/Hr.

* These values were obtained using 180°F stored tank temperature.
Net Output is the space heating capacity based on normal piping and pickup allowance of 15%.
Actual values may vary based on circulator flow rate, number of zones, water and space heating demands. Numbers subject to change.

Heat Exchanger Head Loss

GPM	Ft. of Hd. Loss
2	0.03
5	0.20
8	0.51
10	0.80
12	1.15

C-SW2-TW50 C-SW2-TW75		3" Vent Pipe	4" Vent Pipe
Max. Equivalent Length		60 ft.**	180 ft.
Min. Equivalent Length		7 ft.	15 ft.
Number	1	55 ft.	175 ft.
of	2	50 ft.	170 ft.
90° Elbows	3	45 ft.	165 ft.

Subtract 5ft. for each additional 90° elbow.

** C-SW2-TW75 maximum 3" vent length is 50ft.

© 2017, Bradford White Corporation. All Rights Reserved.

Residential Gas

Combi2™ Double-Wall Atmospheric Models

- Defender Safety System® featuring the patented advanced ScreenLok® Technology flame arrestor design (50 gallon model only)
  - Resettable Thermal Switch
  - Maintenance-Free
  - Sight Window
  - Pedestal Base

All Combi2™ Models Feature:

- Bradford White ICON System™
  - Enhanced Performance
  - Advanced Temperature Control System
  - Intelligent Diagnostics
  - Separate Immersed Thermowell
- Heat Exchanger—Double-wall 1½" O.D. enamel coated (Vitraglas®) steel coil ensures separation of potable water and heating fluid
- Provides Domestic Hot Water and Space Heating in One System
- Low Heat Exchanger Head Loss—Up to 8 GPM flow, with less than 6 ft. of Head Loss
- Vitraglas® Lining
- Hydrojet® Total Performance System
- Water Connections—3/4" NPT true dielectric fittings
- 3/4" Front NPT Supply and Return Connections
- 2" Non-CFC Foam Insulation
- Two Protective Anode Rods
- T&P Relief Valve
- Low Restrictive Brass Drain Valve
- Thermostatic Mixing Valve (ASSE Approved)

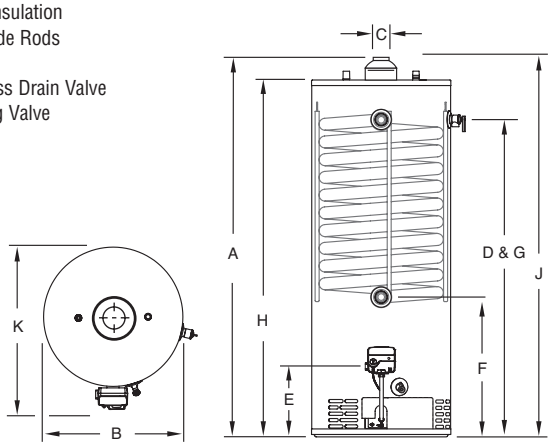

C-DW2-504T10FBN

Combi2™ Double-Wall Atmospheric Models

DIMENSIONS IN INCHES

Meet or exceed ASHRAE 90.1b (current standard) C.E.C. Listed
80% Recovery Efficiency

NATURAL GAS MODELS				A	B	C	D	E	F	G	H	J	K	
Model Number	Gal. Cap.	Input BTU/Hr.	GPH Recovery 90°F Rise*	Floor to Flue Conn.	Jacket Dia.	Vent Size	Floor to T&P Conn.	Floor to Gas Conn.	Floor to Exchanger Inlet	Floor to Exchanger Outlet	Floor to Top of Heater	Floor to Top Water Conn.	Depth	Approx. Shipping Weight (lbs)
C-DW2-504T10FBN	45	65,000	70	59 1/4	22	4	50	13	27 7/8	50	56 3/8	60 3/8	24 1/2	238
C-DW2-75T10BN	72	76,000	81	62 1/4	26	4	51 3/4	13 7/8	29 5/8	51 3/4	59	63	30 3/8	302

All propane models feature a Titanium Stabilized Stainless Steel burner. For propane (LP) models change suffix "BN" to "SX".

* Based on manufacturer's rated recovery efficiency.
CAEF is .55 and CAAFLUE % is 80.0.

LP GAS MODELS	Input BTU/Hr.	GPH Rec. 90°F Rise
C-DW2-504T10FSX	61,000	66
C-DW2-75T10SX	76,000	81

For above models please note recovery changes for LP.

Heat Exchanger Values*

Supply Temperature	140°F	120°F	100°F
Return Temperature	120°F	100°F	80°F
Differential	20°F	20°F	20°F
Flow Rate	2.3 GPM	3.4 GPM	4.4 GPM
Net Output	20,000 BTU/Hr.	29,000 BTU/Hr.	38,000 BTU/Hr.

* These values were obtained using 180°F stored tank temperature.
Net Output is the space heating capacity based on normal piping and pickup allowance of 15%.
Actual values may vary based on circulator flow rate, number of zones, water and space heating demands. Numbers subject to change.

Heat Exchanger Head Loss

GPM	2	5	8	10	12
Feet of Head Loss	0.15	0.94	2.40	3.75	5.40

© 2017, Bradford White Corporation. All Rights Reserved.

Residential Gas

Combi2™ TTW® Double-Wall Power Vent Models

- Defender Safety System® featuring the patented advanced ScreenLok® Technology flame arrestor design (50 gallon model only)
  - Resettable Thermal Switch
  - Maintenance-Free
  - Sight Window
  - Pedestal Base

All Combi2™ TTW® Models Feature:

- Bradford White ICON System™
  - Enhanced Performance
  - Advanced Temperature Control System
  - Intelligent Diagnostics
  - Separate Immersed Thermowell
- Heat Exchanger—Double-wall 1½" O.D. enamel coated (Vitraglas®) steel coil ensures separation of potable water and heating fluid
- Provides Domestic Hot Water and Hydronic Heating in One System
- Low Heat Exchanger Head Loss—Up to 8 GPM flow, with less than 6 ft. of Head Loss
- Vitraglas® Lining
- Hydrojet® Total Performance System
- Power Vented
  - 10 ft. Power Cord Included (120 VAC)
- Horizontal and Vertical Venting
- Water Connections—3/4" NPT true dielectric fittings
- 3/4" Front Supply and Return Connections
- 2" Non-CFC Foam Insulation
- Two protective Anode Rods
- T&P Relief Valve
- Low Restrictive Brass Drain Valve
- Thermostatic Mixing Valve (ASSE Approved)

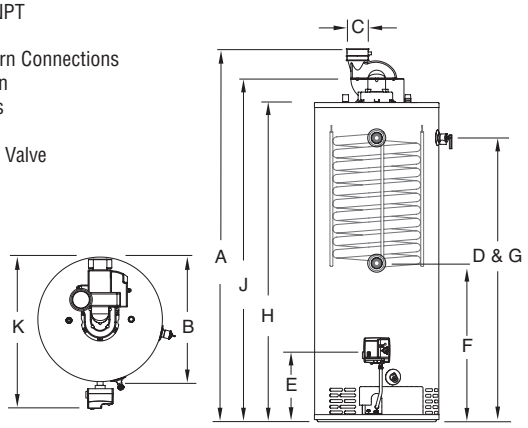

C-DW2-TW50T10FBN

Combi2™ TTW® Double-Wall Power Vent Models

DIMENSIONS IN INCHES

Meet or exceed ASHRAE 90.1b (current standard) C.E.C. Listed
Recovery Efficiency ranging up to 80% (Minimum)

NATURAL GAS MODELS				A	B	C	D	E	F	G	H	J	K	
Model Number	Gal. Cap.	Input BTU/Hr.	GPH Recovery 90°F Rise*	Floor to Vent Conn.	Jacket Dia.	Vent Size	Floor to T&P Conn.	Floor to Gas Conn.	Floor to Exchanger Inlet	Floor to Exchanger Outlet	Floor to Top of Heater	Floor to Top Water Conn.	Depth	Approx. Shipping Weight (lbs)
C-DW2-TW50T10FBN	45	67,000	72	65⅞	22	3 or 4	50⅛	11¾	28	50⅛	56⅜	60¾	26¾	245
C-DW2-TW75T10BN	72	76,000	82	68⅜	26	3 or 4	53	15	30⅞	53	60¼	64¼	31	315

All propane models feature a Titanium Stabilized Stainless Steel burner. For propane (LP) models change suffix "BN" to "SX".

* Based on manufacturer's rated recovery efficiency.
120 V.A.C Required for Power Venting / 120 V.A.C., 60HZ, 3.1 Amperes.

LP GAS MODELS	Input BTU/Hr.	GPH Rec. 90°F Rise
C-DW2-TW50T10FSX	60,000	65
C-DW2-TW75T10SX	75,500	81

For above models please note recovery changes for LP.

Heat Exchanger Values*

Supply Temperature	140°F	120°F	100°F
Return Temperature	120°F	100°F	80°F
Differential	20°F	20°F	20°F
Flow Rate	2.3 GPM	3.4 GPM	4.4 GPM
Net Output	20,000 BTU/Hr.	29,000 BTU/Hr.	38,000 BTU/Hr.

* These values were obtained using 180°F stored tank temperature.
Net Output is the space heating capacity based on normal piping and pickup allowance of 15%.
Actual values may vary based on circulator flow rate, number of zones, water and space heating demands. Numbers subject to change.

Heat Exchanger Head Loss

GPM	Ft. of Hd. Loss
2	0.15
5	0.94
8	2.40
10	3.75
12	5.40

C-DW2-TW50 C-DW2-TW75		3" Vent Pipe	4" Vent Pipe
Max. Equivalent Length		60 ft.**	180 ft.
Min. Equivalent Length		7 ft.	15 ft.
Number	1	55 ft.	175 ft.
of	2	50 ft.	170 ft.
90° Elbows	3	45 ft.	165 ft.

Subtract 5ft. for each additional 90° elbow.
** C-DW2-TW75 maximum 3" vent length is 50ft.

© 2017, Bradford White Corporation. All Rights Reserved.

Residential

PowerStor Series® Single-Wall Indirect Models

- Heat Exchanger—Single-wall 1½" O.D. enamel coated (Vitraglas®) steel coil
- Vitraglas® Lining
- Hydrojet® Total Performance System
- Water Connections—3/4" NPT true dielectric fittings (SW-2-120L has 1" NPT water connection)
- 1" NPT Connection for Boiler Supply And Return
- 2" Non-CFC Foam Insulation
- Immersion Type Aquastat—Accurate temperature control
- Three Protective Aluminum Anode Rods
- T&P Relief Valve
- Low Restrictive Brass Drain Valve
- Limited Lifetime Tank and Heat Exchanger Warranty
- AHRI Certified
- Standby Heat Loss Is Less than 1/2 °F per Hour (ASHRAE 90.1b Current Standard)

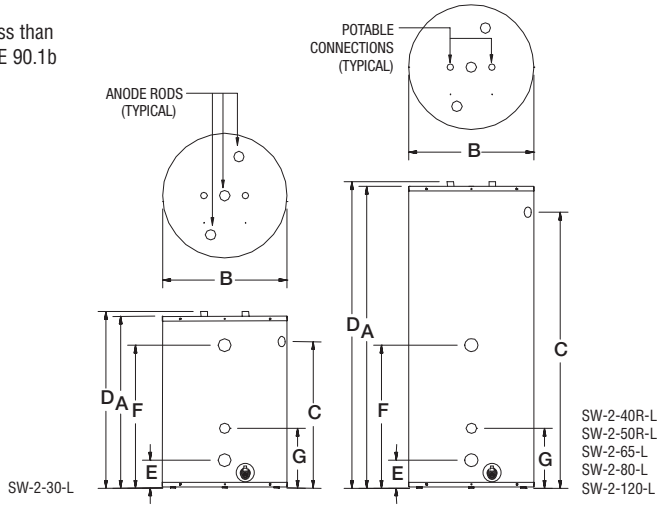

SW-2-65-L

PowerStor Series® Single-Wall Indirect Models

DIMENSIONS IN INCHES

Meet or exceed ASHRAE 90.1b (current standard)

		A	B	C	D	E	F	G	
Model Number	**Gallon Capacity**	**Floor to Heater Top**	**Jacket Dia.**	**Floor to T&P Conn.**	**Floor to Water Conn.**	**Floor to Exchanger Outlet**	**Floor to Exchanger Inlet**	**Floor to Aquastat**	**Approx. Shipping Weight (lbs)**
SW-2-30-L	29	33 5/8	22	28 1/4	34 3/8	5 3/8	27 1/2	11 1/2	164
SW-2-40R-L	37	41 1/8	22	34 3/8	41 7/8	5 3/8	27 1/2	11 1/2	185
SW-2-50R-L	43	46 1/4	22	40 1/8	47	5 3/8	27 1/2	11 1/2	195
SW-2-65-L	57	59 1/4	22	53 1/8	60	5 3/8	27 1/2	11 1/2	225
SW-2-80-L	71	59	24	52 7/8	59 3/4	5 3/8	27 1/2	11 1/2	250
SW-2-120-L	110	62 1/2	28 1/4	55 3/4	63 1/4	6 3/8	28 1/2	11 1/2	370

DOE Water Heater Performance

Model Number	Maximum First Hour Rating (Gal.) @ 140°F	115°F	Continuous Draw Rating (Gal./Min.) @ 140°F	115°F	Approximate Boiler Output Needed for Ratings (BTU/Hr.)
SW-2-30-L	279	429	4.2	6.7	220,000
SW-2-40R-L	288	438	4.2	6.7	220,000
SW-2-50R-L	297	447	4.2	6.7	220,000
SW-2-65-L	306	456	4.2	6.7	220,000
SW-2-80-L	321	470	4.2	6.7	220,000
SW-2-120-L	357	507	4.2	6.7	220,000

Note: Based on 200° F boiler water temperature and 50°F potable water inlet temperature.

AHRI Water Heater Ratings

Model Number	First Hour Delivery	Continuous Draw Rating @ 135°F (Gal./Hr.)	Standby Heat Loss Rating (°F/Hr.)	Heat Req. Rate (BTU/Hr.)	Heat Source Flow Rate (Gal./Min.)
SW-2-30-L	255	235	1.2	157,000	13.7
SW-2-40R-L	260	235	1.1	157,000	13.7
SW-2-50R-L	265	235	0.9	157,000	13.7
SW-2-65-L	275	235	0.7	157,000	13.7
SW-2-80-L	295	235	0.6	157,000	13.7
SW-2-120-L	325	235	0.4	157,000	13.7

Note: These certified ratings were obtained with a heat source output rate and flow rate as specified and a 180° F boiler water supply temperature. Other results will be obtained under different conditions.

© 2017, Bradford White Corporation. All Rights Reserved.

Residential

PowerStor2™ Series® Double-Wall Indirect Models

- Heat Exchanger—Double-wall 1½" O.D. enamel coated (Vitraglas®) steel coil
- Head Loss—Up to 10 GPM flow, with less than 5 ft. of Head Loss
- Vitraglas® Lining
- Hydrojet® Total Performance System
- Water Connections—3/4" NPT true dielectric fittings
- 2" Non-CFC Foam Insulation
- Surface-Mount Thermostat
- Two Protective Magnesium Anode Rods
- T&P Relief Valve
- Low Restrictive Brass Drain Valve
- Limited Lifetime Warranty on Tank and Heat Exchanger
- AHRI Certified
- Standard Heat Loss—Less than 1/2 °F per Hour (ASHRAE 90.1b Current Standard)

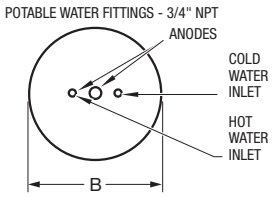

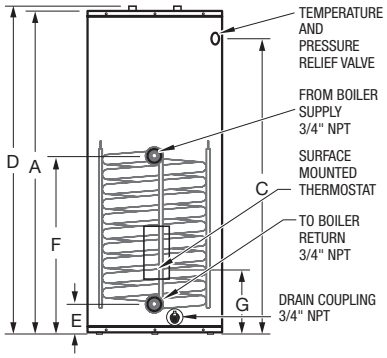

DW-2-50-L

PowerStor2™ Series® Double-Wall Indirect Models

DIMENSIONS IN INCHES

Meet or exceed ASHRAE 90.1b (current standard)

		A	B	C	D	E	F	G	
Model Number	**Gallon Capacity**	**Floor to Heater Top**	**Jacket Dia.**	**Floor to T&P Conn.**	**Floor to Water Conn.**	**Floor to Boiler Return**	**Floor to Boiler Supply**	**Floor to Thermostat**	**Approx. Shipping Weight (lbs)**
DW-2-40-L	37	41	22	34 3/8	41 7/8	5 3/8	27 1/2	11 1/2	195
DW-2-50-L	43	46 1/4	22	40 1/8	47 1/4	5 3/8	27 1/2	11 1/2	205
DW-2-65-L	57	59	22	53 1/8	60	5 3/8	27 1/2	11 1/2	235
DW-2-80-L	71	59	24	52 7/8	59 3/4	5 3/8	27 1/2	11 1/2	255

AHRI Water Heater Ratings

Model Number	First Hour Delivery	Continuous Draw Rating @ 135°F (Gal./Hr.)	Standby Heat Loss Rating (°F/Hr.)	Minimum Heat Req. Rate (BTU/Hr.)	Minimum Heat Source Flow Rate (Gal./Min.)
DW-2-40-L	123	98	1.1	65,000	8.0
DW-2-50-L	133	98	0.9	65,000	8.0
DW-2-65-L	148	98	0.7	65,000	8.0
DW-2-80-L	158	98	0.6	65,000	8.0

Note: These certified ratings were obtained with a heat source output rate and flow rate as specified and a 180° F boiler water supply temperature. Other results will be obtained under different conditions.

DOE Water Heater Performance

Model Number	Maximum First Hour Rating (Gal.) @ 140°F	115°F	Continuous Draw Rating (Gal./Min.) @ 140°F	115°F	Approximate Boiler Output Needed For Ratings (BTU/Hr.)
DW-2-40-L	80	122	0.9	1.6	55,000
DW-2-50-L	87	129	0.9	1.6	55,000
DW-2-65-L	96	138	0.9	1.6	55,000
DW-2-80-L	106	148	0.9	1.6	55,000

Note: Based on 200° F boiler water temperature and 50°F potable water inlet temperature.

© 2017, Bradford White Corporation. All Rights Reserved.

Residential

PowerStor Series® SS Stainless Steel Single-Wall Indirect Models

- Stainless Steel Heat Exchanger—Single-wall 1" O.D. stainless steel coil
- Stainless Steel Tank and Heat Exchanger—Made from Chromium Molybdenum - Titanium Ferritic 444 Stainless Steel Alloy
- Immersed Adjustable Honeywell Aquastat—Fast acting immersion aquastat for automatic temperature control
- Supply and Return Connections—3⁄4" NPT female connections are located on the front for both the Boiler Supply and Boiler Return (1" NPT on RTV-119)
- 2" Non-CFC Foam Insulation
- Potable Water Connections—3/4" NPT dielectric fittings extend water heater life and eases installation (1¼"w NPT on RTV-119)
- T&P Relief Valve
- Low Restrictive Brass Drain Valve
- AHRI Certified

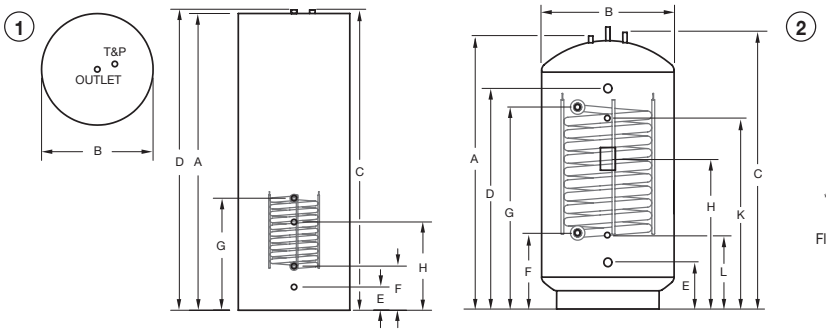

1
RTV-40-L
RTV-52-L
RTV-75-L

2
RTV-120-L
*Floor to Top Spare 3/4" NPT
Tank Connection is 41¾"
Floor to Bottom Spare 3/4" NPT
Tank Connection is 17"

RTV-40-L

PowerStor Series® SS Stainless Steel Single-Wall Indirect Models

DIMENSIONS IN INCHES

		A	B	C	D	E	F	G	H	K	L	
Model Number	**Gal. Cap.**	**Floor to Heater Top**	**Jacket Dia.**	**Floor to T&P Conn.**	**Floor to Hot Water Conn.**	**Floor to Cold Water Conn.**	**Floor to Exchanger Outlet**	**Floor to Exchanger Inlet**	**Floor to Aquastat**	**Floor to Spare 3/4" Hot Water Conn.**	**Floor to Spare 3/4" Cold Water Conn.**	**Approx. Shipping Weight**
RTV-40-L	40	35¼	24	35½	35½	5	9½	24⅝	19	—	—	83
RTV-52-L	52	45⅝	24	45⅞	45⅞	5	9½	28⅜	19	—	—	93
RTV-75-L	75	63⅞	24	64⅛	64⅛	5	9½	28¼	19	—	—	117
RTV-120-L	119	60⅝	30¼	61	49½	11¼	17⅞	45½	36	42¾	17⅞	315

AHRI Water Heater Ratings

Model Number	First Hour Delivery	Continuous Draw @ 135°F (Gal./Hr.)	Standby Heat Loss Rating (°F/Hr.)	Min. Heat Required Rate (BTU/Hr.)	Min. Heat Source Flow Rate (Gal./Min.)
RTV-40-L	158	133	0.9	88,000	8.0
RTV-52-L	200	165	0.7	113,000	8.0
RTV-75-L	225	165	0.5	113,000	8.0
RTV-120-L	360	280	0.6	195,000	11.0

Note: These certified ratings were obtained with a heat output rate and flow rate as specified and a 180°F boiler water supply temperature. Other results will be obtained under different conditions.

Notes:
1) Inlet water temperature based on 50°F.
2) RTV-119 supplied with 2 extra plugged tappings (see manual).
Height to top spare plug is 41¾".
Height to bottom spare plug is 17".
3) RTV-119 equipped with steel casing.
All potable water connections are 3/4" NPT (1¼" on RTV-119).
3⁄4" Aquastat tapping.
3⁄4" T&P valve tapping.

© 2017, Bradford White Corporation. All Rights Reserved.

Residential
Storage Tank Models

- Vitraglas® Lining
- Hydrojet® Total Performance System
- Water Connections—3/4" NPT true dielectric fittings (AST-120 has 1" NPT Connections)
- 2" Non-CFC Foam Insulation
- Fully Automatic Controls
- Protective Magnesium Anode Rod
- Boiler Return Is 3/4"
- Thermal Feet
- T&P Relief Valve Opening
- Brass Drain/Return Valve (3/4")

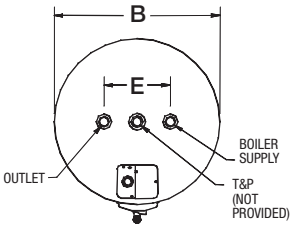

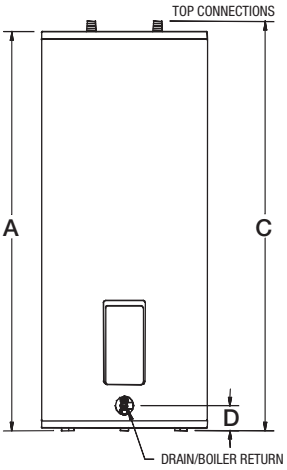

AST-50-6

Storage Tank Models

DIMENSIONS IN INCHES

Meet or exceed ASHRAE 90.1b (current standard)

		A	B	C	D	E	F	G	
Model Number	**Gallon Capacity**	**Floor to Heater Top**	**Jacket Dia.**	**Floor to Top Water Conn.**	**Floor to Drain/ Boiler Return**	**Outlet**	**Heat Source Supply**	**Heat Source Return**	**Approx.Shipping Weight (lbs)**
AST-40-6	40	46 7/8	20	47 7/8	3 1/16	3/4	3/4	3/4	103
AST-50-6	50	46 5/16	22	47 5/16	3 1/16	3/4	3/4	3/4	130
AST-80-6	80	58 7/8	24	59 7/8	3 1/16	3/4	3/4	3/4	183
AST-120-6	119	62 7/8	28 1/4	63 7/8	3 1/16	1	1	3/4	305

Note: Circulator pump and temperature pressure relief valve are NOT included. We recommend you use a stainless steel or low lead circulator pump and relief valve of your choice when installing these storage tanks.

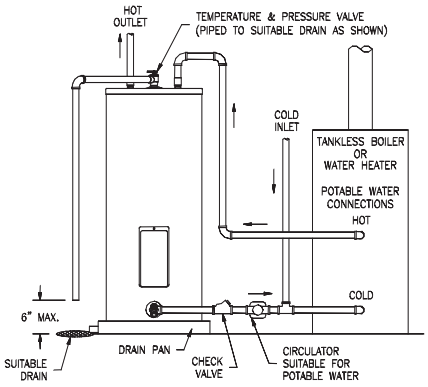

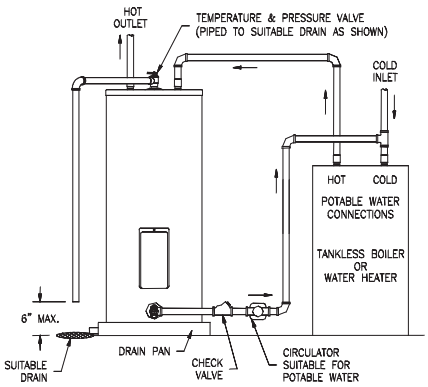

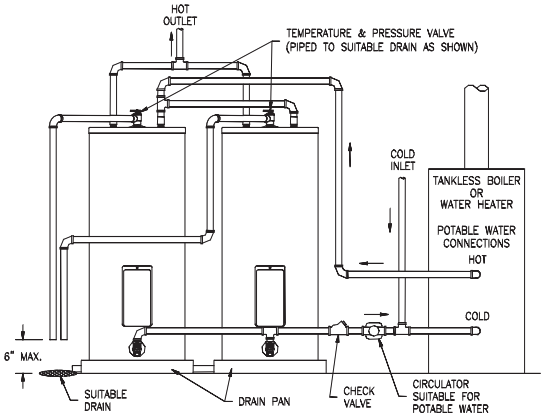

© 2017, Bradford White Corporation. All Rights Reserved.

Warranty Information

	Limited Tank Warranty	Limited Parts Warranty
Residential Gas Models		
Atmospheric Vent High EF Models	**6 or 10 Year**	**6 or 10 Year****
Atmospheric Vent Damper Models	**6 or 10 Year**	**6 or 10 Year****
Residential High EF Models	**6 or 10 Year**	**6 or 10 Year****
Residential High Performance Models	**6 Year**	**6 Year**
Residential TTW® High Performance Models	**6 Year**	**6 Year**
Residential Extra Recovery Models	**6 or 10 Year**	**6 or 10 Year****
Residential Upright Models	**6 or 10 Year**	**6 or 10 Year****
Residential Power Vent Models	**6 or 10 Year**	**6 or 10 Year****
Residential Power Direct Vent Models	**6 or 10 Year**	**6 or 10 Year****
Residential Direct Vent Models	**6 or 10 Year**	**6 or 10 Year****
Residential Ultra Low NOx Models	**6 or 10 Year**	**6 or 10 Year****
Residential eF Series® Models	**6 or 10 Year**	**6 or 10 Year****
Residential Manufactured Home Models	**6 or 10 Year**	**6 Year**
Residential Infiniti Tankless Models	**12 Year***	**5 Year**
Residential Heat Pump Models		
Residential AeroTherm™ Heat Pump Models	**10 Year**	**10 Year**

	Limited Tank Warranty	Limited Parts Warranty
Residential Electric Models		
Residential High Efficiency, Upright, Lowboy Models	**6 or 10 Year**	**6 or 10 Year****
Residential Utility, Wall Hung Models	**6 or 10 Year**	**6 or 10 Year****
Residential Kwickshot® Models	**10 Year†**	**1 Year**
Solar Models		
Residential Solar Models	**6 or 10 Year**	**6 Year**
Residential Hydronic/Space Heating		
Residential Combi1™ Models	**10 Year**	**6 Year**
Residential Combi2™ Models	**10 Year**	**6 Year**
Residential Indirect Models		
Residential PowerStor Series® Model	**Limited Lifetime**	**6 Year**
Residential PowerStor2 Series® Models	**Limited Lifetime**	**6 Year**
Residential PowerStor Series® SS Models	**Limited Lifetime**	**6 Year**
Residential Storage Tank		
Residential AST Models	**6 Year**	**6 Year**

Some states do not allow limitations on warranties. See copy of the Warranty included with the heater.

* Heat Exchanger Only

** 10 year parts warranty on warranty upgrade kit models only

† Heater Body Element Assembly.

Tank Type Serial Number Identification

FIRST LETTER - YEAR OF MANUFACTURE

K = 1993	S = 1998	Z = 2003	E = 2008	K = 2013
L = 1994	T = 1999	A = 2004	F = 2009	L = 2014
M = 1995	W = 2000	B = 2005	G = 2010	M = 2015
N = 1996	X = 2001	C = 2006	H = 2011	N = 2016
P = 1997	Y = 2002	D = 2007	J = 2012	

Bradford White uses a 20-year letter designation rotation in serial numbers. Therefore, please be aware that water heaters manufactured 20 years apart will have the same serial number “letter year” designation. (i.e. A = 2004 and 1984).

SECOND LETTER - MONTH OF MANUFACTURE

A = JANUARY	E = MAY	J = SEPTEMBER
B = FEBRUARY	F = JUNE	K = OCTOBER
C = MARCH	G = JULY	L = NOVEMBER
D = APRIL	H = AUGUST	M = DECEMBER

Example:
FC12345678 = MARCH, 2009 Production
NA12345678 = JANUARY, 1996 Production

© 2017, Bradford White Corporation. All Rights Reserved.