"Apollo" Valves

SUBMITTAL SHEET

LEAD FREE

LC149 Series

Contractor Grade **Butterfly Valves**

CERTIFIED LEADFREE

Job Name:	
Job Location:	
Engineer:	
Contractor:	
Tag:	
PO Number:	
Representative:	
Wholesale Distributor:	

DESCRIPTION

The Apollo International® LC149 Series Cast Iron Butterfly Valves are ideal for use in Industrial and Commercial/HVAC/Mechanical applications. The LC149 Series is a lug style valve designed to be economical yet have high pressure capabilities. Available in sizes 2" - 12".

FEATURES

- Compatible with ANSI 125# & 150# Flanges
- ISO 5211 Top plate allows choice of Apollo® pneumatic actuators and manual operators
- "Double-D" stem design
- Conforms to MSS SP-67 & API 609
- Extended neck for up to 2" of insulation

PERFORMANCE RATING

- Max Operating Pressure: 200 psi
- Temperature Range: -30°F to +225°F

APPROVALS

- NSF/ANSI 372 Lead Free
- NSF/ANSI 61 Water Quality
- CRN 0C12102.8CL

STANDARD MATERIALS LIST

Part Name	Material
Body	Cast Iron, ASTM A126 Class B
Disc	Aluminum Bronze, ASTM B148-C95400
Shaft	Stainless Steel, ASTM A276, Type 416
Seat	EPDM (FDA food grade) with phenolic backing
Bushings	Glass Reinforced Epoxy Resin
Stem Seal	EPDM

TORQUE RATING * (INCH - LBS)

Valve Size	Valve Size	Full Rated Pressures (psi)				Flow
In.	mm	ΔP 50	ΔP 100	ΔP 150	ΔP 200	Cv Full Open
2	50	100	106	111	117	115
2.5	65	150	163	176	189	196
3	80	207	220	232	244	302
4	100	290	323	357	390	600
5	125	423	481	540	598	1022
6	150	599	691	783	875	1579
8	200	1060	1183	1307	1430	3136
10	250	1671	1872	2074	2275	5340
12	300	2568	2795	3023	3250	8250

** Lubricating media service*

WEIGHT

Weight w/ Lever (lbs.)	Weight w/ Gear (lbs.)
8	--
10	--
11	--
17	--
20	--
23	--
44	71
67	94
102	129

MODEL NUMBER

LC149	06	1
SERIES NUMBER	**SIZE (IN)**	**OPERATOR**
LC149 Cast Iron Lug Body Aluminum Bronze Disc 416 SS Shaft Black EPDM Seat	**02** - 2" **25** - 2.5" **03** - 3" **04** - 4" **05** - 5" **06** - 6" **08** - 8" **10** - 10" **12** - 12"	**1** - 10 Position Handle (2" - 12") **2** - Gear Operator (8" - 12" only)

** LEAD FREE: The wetted surfaces of this product shall contain no more than 0.25% lead by weighted average. Complies with Federal Public Law 111-380. ANSI 3rd party approved and listed.*

Apollo Valves, Manufactured by **Conbraco Industries, Inc.**
701 Matthews Mint-Hill Road, Matthews, NC 28105 USA
www.**apollovalves**.com | (704) 841-6000

This specification is provided for reference only. Conbraco Industries Inc. reserves the right to change any portion of this specification without notice and without incurring obligation to make such changes to Conbraco products previously or subsequently sold. Please visit our website @ www.apollovalves.com for the most current information.

AALBERTS INDUSTRIES

"Apollo" Valves

SUBMITTAL SHEET

LEAD FREE

LC149 Series

Contractor Grade **Butterfly Valves**

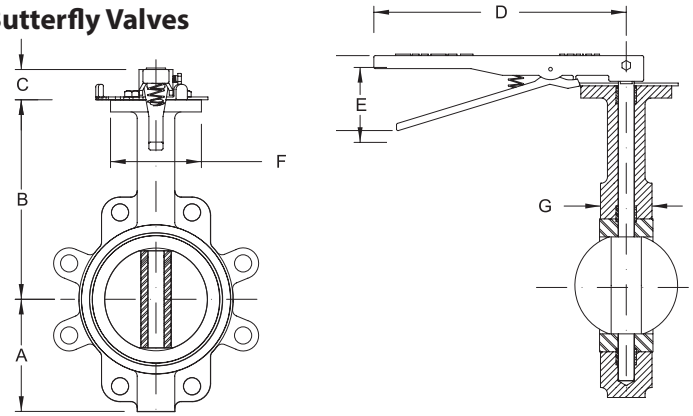

Size (in)	Dimensions in Inches – 149 Series with Handle						
	A	B	C	D	E	F	G
2	3.25	6.38	1.25	10.5	3.1	2.70	1.75
2.5	3.75	6.88	1.25	10.5	3.1	2.70	1.88
3	4.00	7.13	1.25	10.5	3.1	2.70	1.88
4	4.88	7.88	1.25	10.5	3.1	2.70	2.13
5	5.38	8.38	1.25	10.5	3.1	2.70	2.25
6	5.88	8.88	1.25	10.5	3.1	2.70	2.25
8	7.13	10.25	1.75	14.3	3.5	4.61	2.50
10	8.25	11.50	1.88	14.3	3.5	4.61	2.75
12	9.75	13.25	1.88	14.3	3.5	4.61	3.13

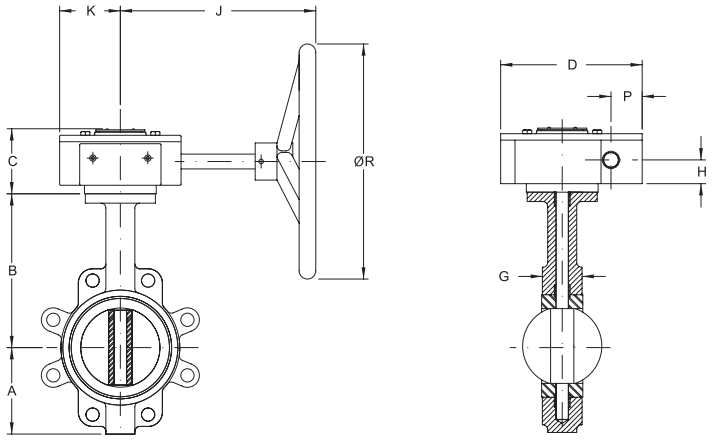

Size (in)	Dimensions in Inches – 149 Series with Gear Operator									
	A	B	C	D	G	H	J	K	P	ØR
8	7.13	10.25	3.38	8.00	2.50	1.62	9.48	3.25	1.50	11.88
10	8.25	11.50	3.38	8.00	2.75	1.62	9.48	3.25	1.50	11.88
12	9.75	13.25	3.38	8.00	3.13	1.62	9.48	3.25	1.50	11.88

Apollo Valves, Manufactured by **Conbraco Industries, Inc.**
701 Matthews Mint-Hill Road, Matthews, NC 28105 USA
www.**apollovalves**.com | (704) 841-6000

This specification is provided for reference only. Conbraco Industries Inc. reserves the right to change any portion of this specification without notice and without incurring obligation to make such changes to Conbraco products previously or subsequently sold. Please visit our website @ www.apollovalves.com for the most current information.

AALBERTS INDUSTRIES