BUTTERFLY VALVES

CATALOG

ABBR141G

RESILIENT SEATED &
DOUBLE OFFSET
HIGH PERFORMANCE

"Apollo" Valves

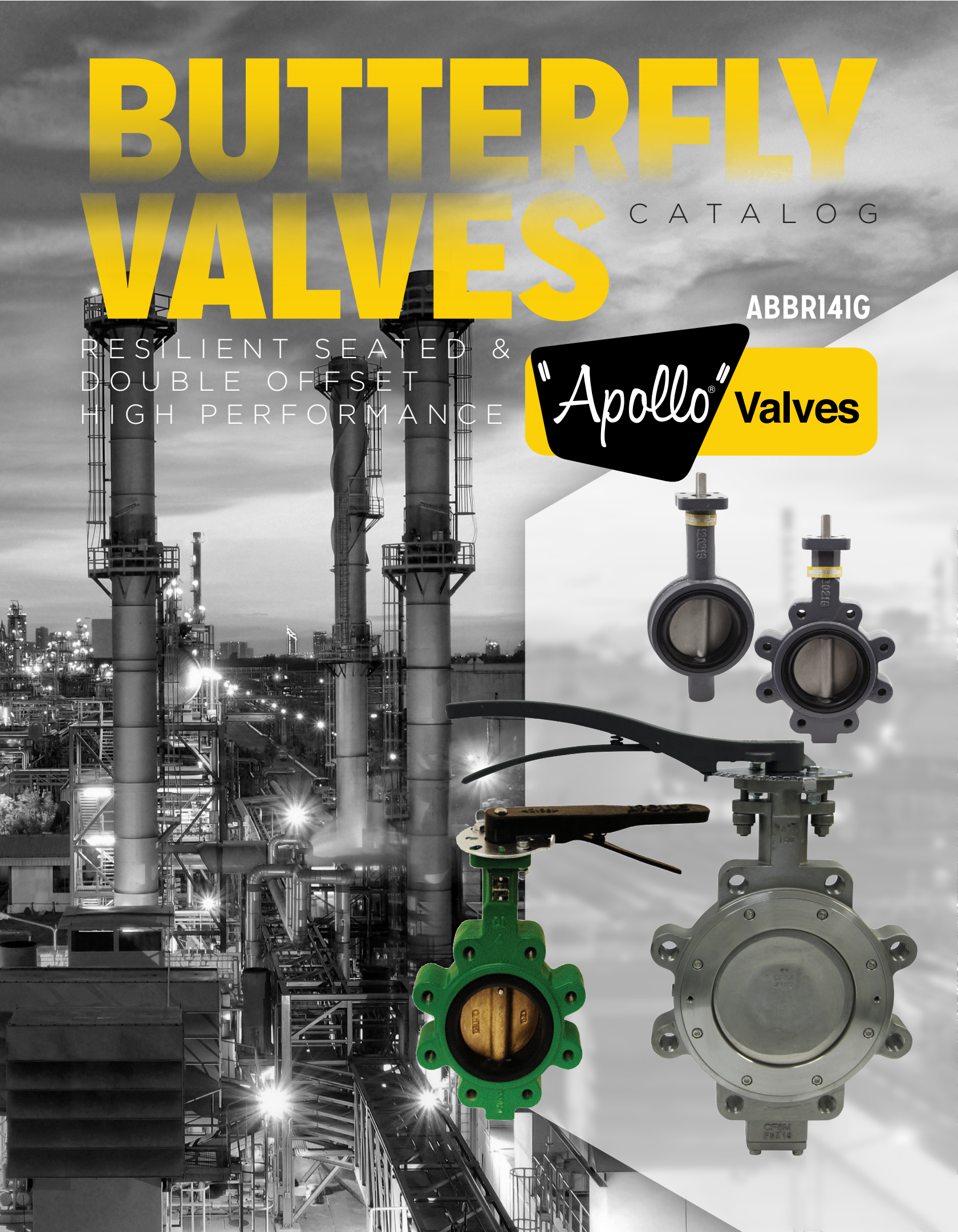

"Apollo" Valves

A history of Quality, Service and Innovation

Apollo® and Apollo International™ iron bodied butterfly valves offer an economical, bubble-tight shut-off design that's ideal for use in commercial HVAC and plumbing as well as irrigation and select industrial applications. These valves are rated to 200 psig in sizes 2" through 12" and 150 psig in sizes 14" and larger. Apollo® and Apollo International™ butterfly valves are available with a variety of options and are easily automated. Apollo International™ Double Offset High Performance Butterfly Valves are now available.

Now in its ninth decade, Conbraco Industries, Inc. is a leading manufacturer of flow control products for U.S. and international markets. The company's headquarters is based in Matthews, North Carolina with manufacturing plants and foundries located in Pageland and Conway, South Carolina.

Conbraco has a history of new product development and innovation that dates back to the company's inception in 1928. Today, the Conbraco line of products is marketed under the "Apollo Valves" brand and includes: ball valves, butterfly valves, backflow prevention devices, water pressure reducing valves, mixing valves, safety relief valves, water gauges, strainers, actuation and APOLLO**XPRESS**® products.

Conbraco's vertically integrated manufacturing ensures a consistency of production, testing, quality and availability. You can be assured that Conbraco flow control products will deliver long term reliability. All manufacturing facilities are ISO 9001:2008 certified.

TABLE OF CONTENTS

RESILIENT SEATED BUTTERFLY VALVES
General Purpose Butterfly Valves - 141 & 145 Series

Advantages 3
Parts List 3
Specification 4
Option 5
Application 6
Installation 7
Dimensions 8-10
Operating Torque and Cv Data 11
Contractor Grade Butterfly Valves - 149 Series 12
How to Order Resilient Seated Butterfly Valves 13

DOUBLE OFFSET HIGH PERFORMANCE BUTTERFLY VALVES
215, 230 & 260 Series 14

Advantages 15
Parts List 16-18
Dimensions 19-24
How to Order High Performance Butterfly Valves 24
Warranty 25

CERTIFIED LEADFREE OPTIONS AVAILABLE

THROUGHOUT THIS CATALOG, PRODUCTS THAT HAVE A **LEAD FREE*** OPTION WILL BE IDENTIFIED WITH THIS LOGO.

* LEAD FREE: The wetted surfaces of this product shall contain no more than 0.25% lead by weighted average. Complies with Federal Public Law 111-380. ANSI 3rd party approved and listed.
** Any imported products are clearly identified as "Apollo International™" or "Conbraco™ International".

Conbraco Industries offers a wide range of Apollo® products for potable and non-potable applications. When the use of lead free valves is required by code, specification or legislation, it is the sole responsibility of our customers to ensure that only lead free Apollo® products are installed in systems intended for potable water service. Further information related to our product offering and the U.S. Safe Drinking Water Act (SDWA) is available at **www.apollovalves.com/lead_free**, or by contacting Conbraco Customer Service.

Item	Description	Material
1	Body	Ductile Iron ASTM A536 (65-45-12)
2	Seat	EPDM* --- or --- Buna-N (Nitrile)* --- or --- Viton®B*
3	Shaft	416 Stainless Steel ASTM A564
4	Disc	Nickel Plated Ductile Iron ASTM A536 (65-45-12) --- or --- Aluminum-Bronze ASTM B148, C95400 --- or --- 316 Stainless Steel A STM A351, Type CF8M
5	Bushing	Glass Reinforced Epoxy
6	Weather Seal	Buna-N
7a	Retainer	Steel with Protective Finish
7b	Retainer	Steel with Protective Finish
8	Washer	Brass
9	Set Screws (Flat Point)	Steel with Protective Finish
10	Set Screws (Cone Point)	Steel with Protective Finish
11	Nameplate	

CERTIFIED LEADFREE

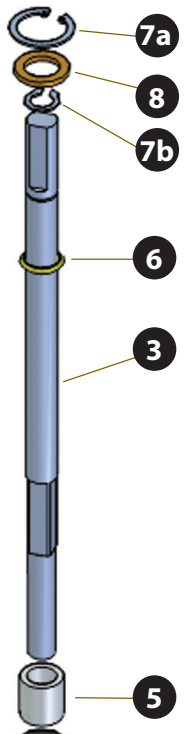

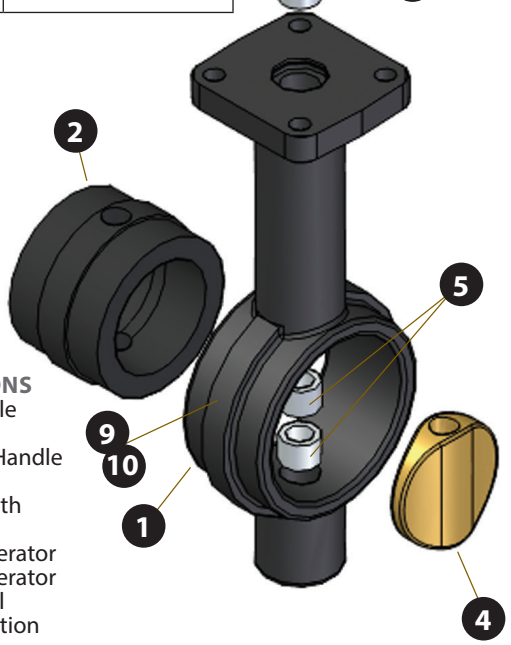

Exploded View
WD141 – Wafer Design Shown

AVAILABLE OPTIONS
- 10 Position Handle
- Gear Operator
- Infinite Position Handle
- Locking Handle
- Gear Operator with Chain Wheel
- Locking Gear Operator
- Locking Gear Operator with Chain Wheel
- Pneumatic Actuation
- Electric Actuation
- Silicon Free Assembly Option (145 Series)

Pressure Rating
- 2" to 12": 200 psi
- 14" to 24": 150 psi

Apollo International™
- **WD141:** One-piece wafer-style, sizes 2" to 12"
- **LD141:** Lug valves, sizes 2" to 24" (contact the factory for LD141 sizes greater than 24")

Apollo Assembled & Tested in USA
- **WD145:** One-piece wafer-style, sizes 2" to 12"
- **LD145:** Lug valves, sizes 2" to 12"

Certification
- Certified to NSF/ANSI 372 Lead Free.
- Registered under Canadian Registration Number CRN# 0C12102.8CL.

Body Design
- Ductile Iron ASTM A536
- WD Model: a one-piece wafer design with flange locating holes in larger sizes (8" to 12")
- LD Model: valves are full lug with tapped lugs, to ANSI 125/150 drilling. Face-to-face dimensions meet universal interchangeability standards outlined in MSS SP-67 and API 609.
- Models come equipped with an extended neck providing at least 2" clearance between the valve top plate and pipe flange to allow ease of insulation installation.

Blowout Proof Seat with Molded in Stiffener Ring
- Isolates body from process media.
- Valves are equipped with a stretch-resistant, non-collapsible blowout-proof seat.
- Phenolic Stiffener Ring (2"-12")
- Aluminum Stiffener Ring (14"-24" LD141 only)

Seat – No Gaskets Required
- Seat design eliminates the need for flange gaskets.
- Installs between standard ANSI 125/150 flanges.

Mounting Flange For Actuator
- ISO 5211 standard cast-in top plate
- Designed to dimensions for easy mounting of Apollo® actuators and manual operators.

Through Shaft
- Assures positive disc positioning and dependable performance.

Weather Seal
- Shaft equipped with weather seal to prevent external media from entering the shaft bore.

Square Shaft-to-Disc Connection
- Provides a robust shaft-to-disc connection without pins or bolts. Easy maintenance.

Three Bushings
- Supports shaft at three locations to enhance shaft alignment and absorb actuator side thrusts.

Profiled Disc Design
- Precision machined disc edge creates bubble tight shutoff, primary seal. Polished disc edge ensures long seat life, minimal torque.

Shaft Seal
- The shaft diameter is greater than the diameter of the seat's shaft hole creating a robust shaft seal.
- The stiffening ring molded into the seat guards against distortion, a frequent cause of shaft leakage.

End of Line Service
- All LD Model valves are equipped with retainer screws for dead end service; 2" through 12" to 200 psig

Testing: All valves are 100 percent factory tested before shipping

DESIGN SPECIFICATIONS

- ☐ WD (ductile iron, wafer body design)
  LD (ductile iron, single flange, lug body design)
- ☐ Designed to fully comply with MSS SP-25, **MSS SP-67**, and **API 609**
- ☐ Meets the intent and passed AWWA C-504 Section 5* proof of design tests
- ☐ NSF/ANSI 372 "lead free" in compliance with the U.S. Safe Drinking Water Act effective January 4, 2014.
- ☐ Extended neck to allow up to 2" of insulation
- ☐ Dead-End Service: Lug style valves are suitable for end of line service to their rated pressure without the use of a downstream flange (2" - 12" only)
- ☐ Ideal for ON/OFF and throttling service
- ☐ Designed for extended service with minimal wear and maintenance. No regular lubrication is necessary
- ☐ Compatible with ASME Class 125 and Class 150 weld neck or slip-on flanges
- ☐ Larger wafer body design includes four alignment holes 8" to 12" (DN200 to DN300) WD models
- ☐ Polyester Body Coating:
  - Resistant to ultra-violet radiation
  - Resists a broad range of chemicals including dilute acids, alkalis, solvents alcohols, greases, oils
  - Resists most impacts without chipping or cracking
- ☐ Cartridge Style Seat:
  - Isolates body and stem from the media
  - Provides mating flange seals eliminating the need for separate flange gaskets
  - Provides positive shut-off of line media at rated pressures
- ☐ EPDM and Buna-N (Nitrile) Seats are **Food Grade as standard**
- ☐ Profiled Disc design assures bubble-tight shut-off, minimal torque and longer seal life
- ☐ Double-D shaft drive 2" to 14" (DN50 - DN350)
  Round and keyed shaft drive 16" to 24" (DN400 - DN600)
- ☐ Blow-out Proof Shaft
- ☐ Upper and lower shaft bearing ensure longer seat life and lower operating torque
- ☐ Actuator mounting flange (top plate) conforms to ISO 5211 which allows choice of lever operators, gears and direct mounting of many Apollo pneumatic and electric actuators

*Specification applies to 3" - 24" valves

SPECIFICATIONS

SIZE RANGE

141 Series: Apollo International™

WD141 (wafer body design):	2"-12" (DN50 - DN300)
LD141 (single flange body design):	2"-24" (DN50 - DN600)

145 Series: Assembled & Tested in USA

WD145 (wafer body design):	2"-12" (DN50 - DN300)
LD145 (single flange body design):	2"-12" (DN50 - DN300)

PRESSURE-TEMPERATURE RATING AT 100°F (37.8°C)

All Body, Disc, Seat Combinations

2"-12" (DN50 - DN300)	200 psi (13.8 bar)
14"-24" (DN350 - DN600)	150 psi (10.3 bar)
All Sizes – Vacuum Rating	29 inches of Hg (737 mm of Hg)

TEMPERATURE RATING - SEATS

EPDM	-20° F to 250° F Intermittent, 225° F Continuous (-29° C to 107° C)
Buna-N (Nitrile)	10° F to 180° F (-12° C to 82° C)
Viton® B	-20° F to 300° F (-29° C to 149° C)

FLANGE DRILLING

ANSI 125/150 Drilling Standard

- WD -- wafer body design: 8"to 12" (DN200 to DN300) include two alignment holes

TESTING

Every LD and WD is fully tested prior to shipment. Testing includes a body shell test, a seat test, and a cycling test to insure proper functioning of moving parts. Additional testing is also available. Please let us know your requirements.

SHUTOFF PERFORMANCE

Zero Leakage. Bi-directional, Bubble Tight. All Sizes

ANSI/FCI 70-2 establishes a series of six leakage classes for control valves and defines the test procedure. Class VI allows the least leakage. LD's and WD's are bubble tight, which exceeds Class VI requirements.

145 Series

The following options are available factory installed on any of the LD or WD Series Apollo Butterfly Valves.

The LC149 series are available either with the standard 10-position handle or with the optional gear operator on sizes 8" and larger. The other options may be purchased in kit form and installed by the user or distributor.

BARE STEM (MODEL CODE SUFFIX 0)

Select this suffix to specify a butterfly valve without a handle, gear operator or actuator.

TEN (10) POSITION HANDLE (SUFFIX 1)

The 10 position handle is the most common manual operator for valves 8" and smaller. (It can be specified on valves through 12" size.) The 10 position handle allows the valve to be set in any one of ten positions between fully open and fully closed (approximately 10 degree increments).

GEAR OPERATOR (SUFFIX 2)

Although the option is available for any size of valve, it is commonly used on valves larger than 6", and is the only manual option offered for valves 14" and larger. All gear operators feature a self-locking design preventing back driving of the gear and drifting in the disc's position. All gear operators are weather resistant and permanently lubricated. They are equipped with position indicators and adjustable travel stops.

INFINITE POSITION HANDLE (SUFFIX 3)

This option allows the valve to be set at any degree of open and is available for valves 2" through 12".

LOCKING HANDLE WITH 10 POSITION PLATE (SUFFIX 4)

The option adds a locking device to "suffix 1".

GEAR OPERATOR W/ CHAINWHEEL (SUFFIX 5)

A manual gear with chainwheel allows an overhead valve to be opened or closed from a location lower than the valve.

LOCKING GEAR OPERATOR (SUFFIX 7)

A manual gear with lock-out option allows the manual gear to be locked with a padlock.

LOCKING GEAR OPERATOR W/ CHAINWHEEL (SUFFIX 8)

Combination of both chainwheel operator (suffix 5) and the locking device (suffix 7) are also available to work in conjunction with the gear operators described under "suffix 2".

SELF LOCKING GEAR OPERATORS

Self locking manual gear operators are available for all Apollo® WD and LD Series butterfly valves for heavy duty ON/OFF and throttling service. Gear operators are completely weatherproof and self-lubricating; they're equipped with position indicators and adjustable travel stops. Chainwheel operators are available. **All units feature 12" handwheels** with gearing for each size to keep rim pull at 50# or less.

HANDLE AND NOTCH PLATE KITS

Handle and notch plate kits are supplied for manual operation, ON/OFF and throttling service. Kit provides positive disc position indication for 2" to 12" WD and LD Series butterfly valves. Locking handle and infinite position handle are also available.

APOLLO® ACTUATORS

Apollo® Actuators are available as double acting or as spring return and come with a wide variety of corrosion resistant coatings for use in most any application. Standard features include external travel stop adjustments, high temperature, low friction bearings and seals. Mounting kits are available for ease of installation.

Butterfly valves require pneumatic actuators with dual (open & close) limit stops.

The Apollo® LD/WD Series Ductile Iron Butterfly Valves offer reliable performance in a wide range of applications; on/off, throttling, control isolation, flow balancing and diversion. Ideal for use in Industrial and HVAC/Mechanical applications.

Service compatibility is dependant on several factors; the corrosion resistance of the disc and shaft and the chemical resistance of the seat (liner) and required temperature range. Erosion resistance also affects material selection when dealing with abrasive slurries.

EPDM Cartridge Style Seat **Ethylene propylene rubber**	**Buna-N Cartridge Style Seat** **Nitrile rubber** **Also known as NBR**	**Viton® B Cartridge Style Seat** **Fluorocarbon rubber**
Temperature rated from -20°F to 250°F Intermittent, 225°F Continuous	Temperature rated from 10°F to 180°F	Temperature rated from -20°F to 300°F
Typical applications: • Food Grade EPDM is Standard • Typically offered for general service and elevated temperatures • Hot water • Chilled water • Glycols • Detergents • Phosphate esters • Ketones • Alcohols • Low Pressure Steam • Dilute acids • Phosphate based hydraulic oils and fluids • Silicone greases and oils • Alkalies	**Typical applications:** • Food Grade Buna-N is Standard • Good for most general services • Water – ambient temperature • Vacuum • Compressed air • Salt solutions • Alkaline solutions • Dilute acids • Petroleum oils & fluids • Silicone oils & greases • Ethylene glycol	**Typical applications:** • A fluorocarbon rubber with a wide spectrum of chemical resistance (exceptional resistance to oils and chemicals at higher temperatures). • A fluorocarbon rubber that typically has better chemical resistance than Buna-N. • Hydrocarbons • Mineral acids • Alcohols
⦸ EPDM is not recommended for any hydrocarbon-based oils, petroleum oils, hydrocarbon-based lubricants, or di-ester based lubricants, or air systems with hydrocarbons.	⦸ Buna-N can swell in hot water applications, and increase operating torque. ⦸ Buna-N is NOT recommended for strong oxidizing agents, nitrated hydrocarbons, Aromatic hydrocarbons (benzene, toluene, xylene), acetates, phenols, aldehydes, gasolines with additives, Automotive brake fluid, Halogen derivatives (carbon tetrachloride, trichloroethylene), Ketones (MEK, acetone), Phosphate ester hydraulic fluids (Skydrol®, Pydraul®), Strong acids, ozone	⦸ Viton® can swell in higher temperature water applications. ⦸ At low temperatures, Viton® 's flexibility decreases (hardens), which often increases operating torque. ⦸ Viton® is not recommended for ketones, Skydrol fluids, amines, anhydrous ammonia, low molecular weight esters and ethers, hot hydrofluoric chlorosulfonic acids.

Apollo® butterfly valves are designed for installation between ANSI Class 125/150 lb. weld-neck or slip-on flanges. While we suggest use of weld neck flanges, Apollo® models are configured to also accept slip-on flanges that eliminate failures associated with conventional butterfly valves. Be sure to properly align flange and valve when using raised face flanges. Type C stub end flanges are not recommended.

Apollo butterfly valves can be used with schedule 40 and schedule 80 steel pipe. When the valve is properly centered between flanges, the disc of an open butterfly valve will not contact the inside diameter of schedule 40 or schedule 80 steel pipe.

Caution: Adjacent piping and components with reduced inside diameters (Lined pipe, Schedule 80 plastic pipe, As-cast rough fittings, etc) could cause disc-pipe contact which could damage the valve's disc and shaft.

INSTALLING WD/LD SERIES VALVES

Begin by positioning the disc at partially open; maintain the disc within the body face-to-face. After positioning the valve body between flanges, install flange bolts.

Do not use flange gaskets. Before tightening flange bolts, adjust disc to the full open position. This helps assure proper alignment and clearance between the outside diameter of the disc and the inside diameter of the pipe. Hand tighten the bolts and then wrench tighten in stages following the proper sequential bolt order for the flange. After tightening, rotate disc carefully to closed position to assure proper outside diameter clearance.

MAINTENANCE

Apollo® butterfly valves are designed for extended service with minimal wear and servicing. No regular lubrication is needed. In case of replacement, put disc in a near closed position and remove from line, spread flanges and support the valve while removing flange bolts.

Note: Always depressurize a piping system when removing a manual or power actuator or performing valve maintenance.

Note: For additional details see appropriate Installation Operation & Maintenance Manual.
(LD141 - I979900, LD145 - I981800, LC149 - I980700)

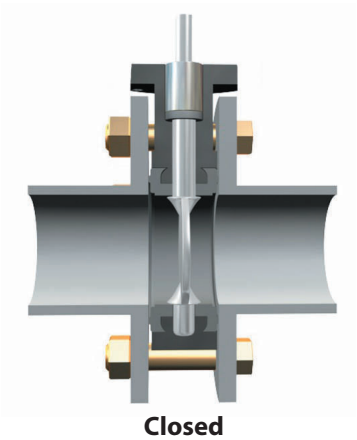

Closed

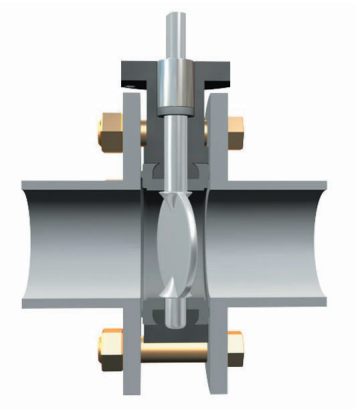

Partially Open

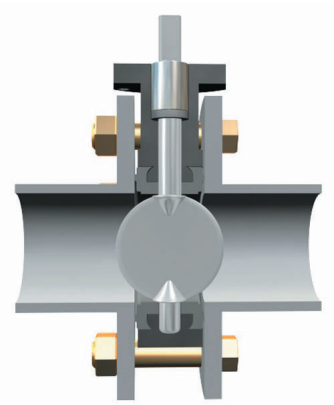

Open

141 Series: Apollo International™
145 Series: Assembled & Tested in USA

WD MODEL

2" - 12"

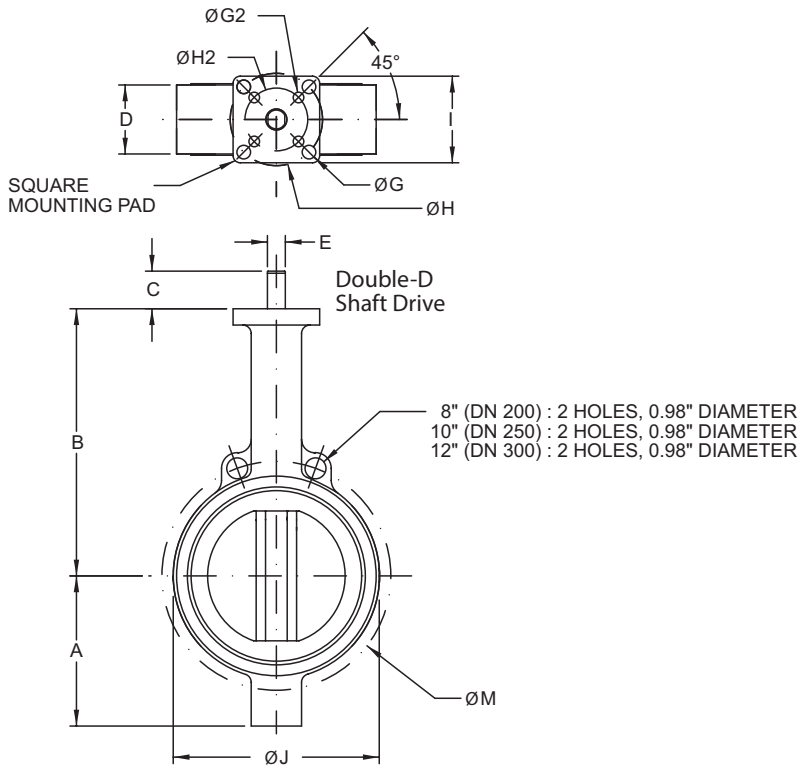

LD MODEL

2" - 12"

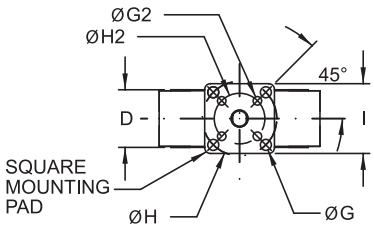

14" - 24"

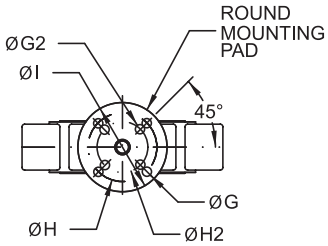

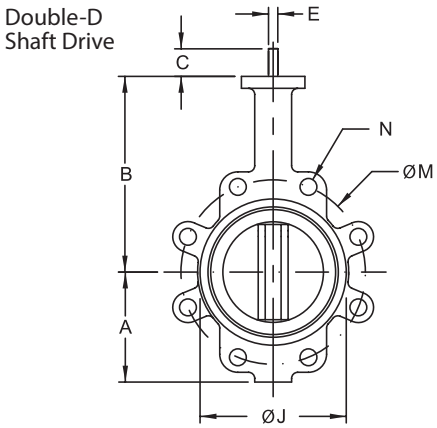

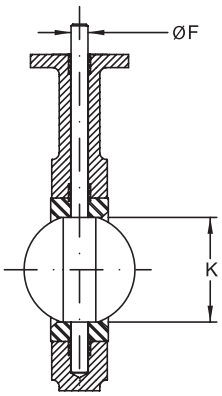

Shaft Drive:
Double-D (14")
Round & Keyed (16" & larger)

DOUBLE-D AND KEYED STEM

Size Inches	Size DN	Dimensions in Inches																	
		A	B	C	D	E	ØF	ØG	ØG2	Key	ØH	ØH2	I	ØJ	K	Disc Chord	M	N (WD)	N (LD)
2	50	3.25	6.375	1.25	1.75	0.394	0.496	0.375	--	--	2.756	--	2.699	4	2.09	1.113	4.75	0.688	.625-11
2.5	65	3.75	6.880	1.25	1.88	0.394	0.496	0.375	--	--	2.756	--	2.699	4.75	2.54	1.706	5.50	0.688	.625-11
3	80	4.00	7.130	1.25	1.88	0.394	0.496	0.375	--	--	2.756	--	2.699	5.13	3.09	2.450	6.00	0.688	.625-11
4	100	4.88	7.880	1.25	2.13	0.472	0.621	0.375	--	--	2.756	--	2.699	6.75	4.09	3.488	7.50	0.688	.625-11
5	125	5.38	8.380	1.25	2.25	0.551	0.745	0.375	--	--	2.756	--	2.699	7.75	4.85	4.296	8.50	0.813	.750-10
6	150	5.88	8.880	1.25	2.25	0.551	0.745	0.375	--	--	2.756	--	2.699	8.63	6.13	5.697	9.50	0.813	.751-10
8	200	7.13	10.250	1.75	2.50	0.669	0.870	0.563	0.438	--	4.921	4.015	4.606	10.56	7.89	7.468	11.75	0.813	.750-10
10	250	8.25	11.500	1.88	2.75	0.866	1.120	0.563	0.438	--	4.921	4.015	4.606	13.06	9.89	9.484	14.25	0.938	.750-10
12	300	9.75	13.250	1.88	3.13	0.945	1.244	0.563	--	--	4.921	--	4.606	16	11.89	11.456	17.00	0.938	.875-9
14*	350	11.00	14.500	1.88	3.13	0.945	1.244	0.563	--	--	4.921	--	Ø5.91	17.13	13.38	13.000	18.75	1.060	1.00-8
16*	400	12.00	15.750	2.00	3.50	--	1.313	0.563	--	0.313	4.921	--	Ø5.91	20	15.38	14.970	21.25	1.060	1.00-8
18*	450	14.38	16.630	2.00	4.25	--	1.500	0.813	--	0.375	6.496	--	Ø8.27	21.38	17.38	16.847	22.75	1.250	1.125-7
20*	500	14.63	18.880	2.50	5.25	--	1.625	0.813	--	0.375	6.496	--	Ø8.27	23.31	19.38	18.650	25.00	1.250	1.125-7
24*	600	18.00	22.130	2.75	6.13	--	2.000	0.813	--	0.500	6.496	--	Ø8.27	27.88	23.38	22.558	29.50	1.380	1.25-7

** LD141 Series only*

Approximate Weight for Bare Shaft Valve

Valve Size		WD Model Lbs (kg)	LD Model Lbs (kg)
Inches	DN		
2	50	6 (2.7)	8 (3.6)
2.5	65	6 (2.7)	10 (4.5)
3	80	7(3.2)	11 (5.0)
4	100	11 (5.0)	17 (7.7)
5	125	13 (5.9)	20 (9.1)
6	150	16 (7.3)	23 (10.4)
8	200	29 (13.2)	39 (17.7)
10	250	44 (20.0)	62 (28.1)
12	300	70 (31.8)	97 (44.0)
14*	350		148 (67.1)
16*	400		200 (90.7)
18*	450		277 (125.6)
20*	500		410 (186.0)
24*	600		592 (268.5)

** LD141 Series only*

141 Series: Apollo International™
145 Series: Assembled & Tested in USA
** keys are supplied w/ bare stem valves*

141 Series: Apollo International™
145 Series: Assembled & Tested in USA

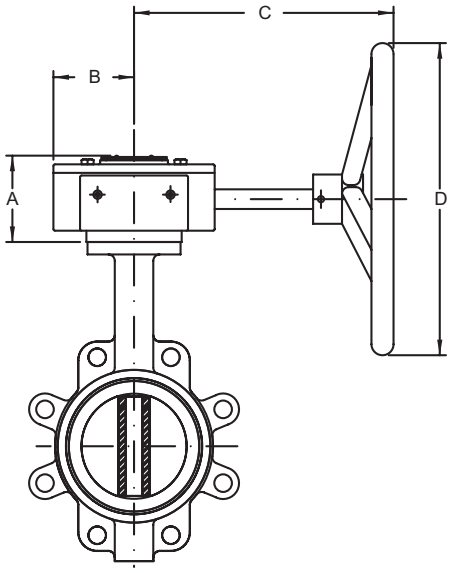

with Manual Gear

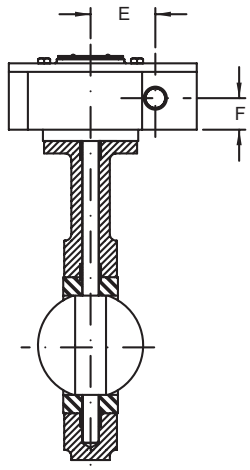

with Manual Gear

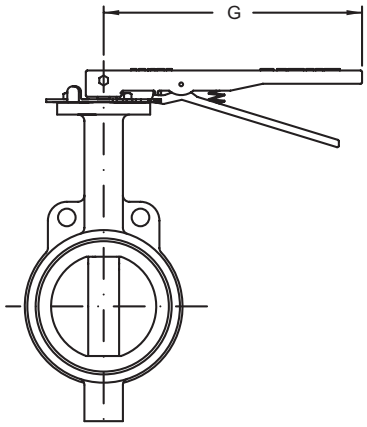

with Handle

NOTE: All Gear Operators supplied with 12" Handwheels with gearing to provide RIM pull at 50# or less.

Valve Size		Gear Ratio	Dimensions in Inches						
Inches	DN		A	B	C	D	E	F	G
2"	50	30:1	3.4	3.0	9.2	11.9	2.5	1.5	10.5
2.5"	65	30:1	3.4	3.0	9.2	11.9	2.5	1.5	10.5
3"	80	30:1	3.4	3.0	9.2	11.9	2.5	1.5	10.5
4"	100	30:1	3.4	3.0	9.2	11.9	2.5	1.5	10.5
5"	125	30:1	3.4	3.0	9.2	11.9	2.5	1.5	10.5
6"	150	30:1	3.4	3.1	8.9	11.9	2.5	1.5	10.5
8"	200	50:1	3.4	3.3	8.9	11.9	3.0	1.6	14.0
10"	250	50:1	3.4	3.3	8.9	11.9	3.0	1.6	14.3
12"	300	50:1	3.4	3.3	8.9	11.9	3.0	1.6	14.3
14"*	350*	50:1	3.4	3.3	8.9	11.9	3.0	1.6	--
16"*	400*	80:1	4.8	5.1	11.8	11.9	4.7	2.3	--
18"*	450*	80:1	4.8	5.1	11.8	11.9	4.7	2.3	--
20"*	500*	300:1	5.9	5.1	13.8	11.9	4.7	2.8	--
24"*	600*	300:1	5.9	5.1	13.8	11.9	4.7	2.8	--
30"*	750*	640:1	4.9	5.1	11.9	15.7	7.8	5.0	--
36"*	900*	640:1	4.9	5.1	11.9	15.7	9.0	5.0	--

** LD141 Series only*

All torque valves shown in the chart are for wet (water and other non-lubricating media) on-off service. For dry services (non-lubricating, dry gas media) multiply the values by 1.15. For lubricous services (clean, non-abrasive lubricating media) multiply values by 0.85.

Under certain conditions, hydrodynamic torque can meet or exceed seating and unseating torques. When designing valve systems, hydrodynamic torque must be considered to help ensure correct selection of actuation.

Torque Rating (lbs•in)

Valve Size		Full Rated Pressures (psig)			
Inches	DN	ΔP 50	ΔP 100	ΔP 150	ΔP 200
2	50	100	106	111	117
2.5	65	150	163	176	189
3	80	207	220	232	244
4	100	290	323	357	390
5	125	423	481	540	598
6	150	599	691	783	875
8	200	1060	1183	1307	1430
10	250	1671	1872	2074	2275
12	300	2568	2795	3023	3250
14*	350*	2640	3070	3500	N/A
16*	400*	4260	4880	5500	N/A
18*	450*	6287	7243	8200	N/A
20*	500*	8360	9180	10000	N/A
24*	600*	15427	16813	18200	N/A

** LD141 only*

Velocity Limits

VELOCITY LIMITS
- For ON/OFF Services
- Non-abrasive liquids - 30 feet/sec (9m/sec)
- Gases - 175 feet/sec (54m/sec)

Cv Data – 141 Series, 145 Series & 149 Series

Cv values (US gallons per minute) represent the flow of 60°F water through a 100% open valve at a pressure drop of 1 psi.

The metric equivalent, Kv, is the flow of water at 16°C through the valve in cubic meters per hour at a pressure drop of 1 kg/cm2. To convert Cv to Kv, multiply the Cv by 0.8569.

Rated Flow Coefficient (Cv)

Valve Size		Angle of Disc Opening (degrees)								
Inches	DN	10°	20°	30°	40°	50°	60°	70°	80°	90°
2	50	0.06	3	7	15	27	44	70	105	115
2.5	65	0.10	6	12	25	45	75	119	178	196
3	80	0.20	9	18	39	70	116	183	275	302
4	100	0.30	17	36	78	139	230	364	546	600
5	125	0.50	29	61	133	237	392	620	930	1022
6	150	0.80	45	95	205	366	605	958	1437	1579
8	200	2	89	188	408	727	1202	1903	2854	3136
10	250	3	151	320	694	1237	2047	3240	4859	5340
12	300	4	234	495	1072	1911	3162	5005	7507	8250
14*	350*	6	338	715	1549	2761	4568	7230	10844	11917
16*	400*	8	464	983	2130	3797	6282	9942	14913	16388
18*	450*	11	615	1302	2822	5028	8320	13168	19752	21705
20*	500*	14	791	1674	3628	6465	10698	16931	25396	27908
24*	600*	22	1222	2587	5605	9989	16528	26157	39236	43116

** LD141 only*
This chart should be used as a general guide.
For additional Cv information, consult the ***Engineering and Application Data Section.*** *Cv = the volume of water in U.S. gallons per minute that will pass through a given valve opening with a pressure drop of 1 psig at room temperature.*

BUTTERFLY VALVES - RESILIENT SEATED

contractor grade butterfly valves - 149 series

CERTIFIED LEADFREE

The Apollo® LC149 Series Cast Iron Butterfly Valves are ideal for use in Industrial and HVAC/Mechanical applications. The LC149 Series is a lug style valve designed to be economical yet full featured.

STANDARD MATERIALS

Body	Cast Iron, ASTM A126 Class B
Disc	Aluminum Bronze, ASTM B148-C95400
Shaft	Stainless Steel, ASTM A276, Type 416
Seat	Black EPDM (FDA food grade) with phenolic backing
Bushings	PTFE
Stem Seal	EPDM

PERFORMANCE RATING

- Max Operating Pressure: 200 psi (13.8 bar)
- Temperature Range: -20°F to 250°F Intermittent, 225°F Continuous (-29° C to 107° C)

APPROVALS

- NSF/ANSI 372 Lead Free
- Registered under Canadian Registration Number CRN# 0C12102.8CL

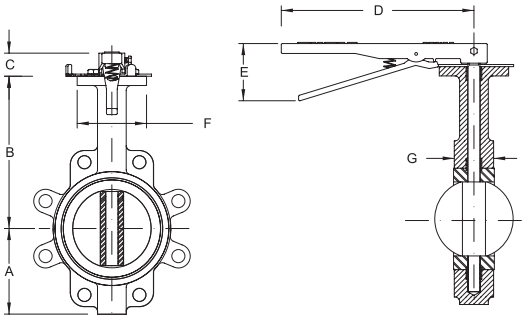

Size (in)	Dimensions in Inches – 149 Series with Handle						
	A	B	C	D	E	F	G
2	3.25	6.38	1.25	10.5	3.1	2.70	1.75
2.5	3.75	6.88	1.25	10.5	3.1	2.70	1.88
3	4.00	7.13	1.25	10.5	3.1	2.70	1.88
4	4.88	7.88	1.25	10.5	3.1	2.70	2.13
5	5.38	8.38	1.25	10.5	3.1	2.70	2.25
6	5.88	8.88	1.25	10.5	3.1	2.70	2.25
8	7.13	10.25	1.75	14.3	3.5	4.61	2.50
10	8.25	11.50	1.88	14.3	3.5	4.61	2.75
12	9.75	13.25	1.88	14.3	3.5	4.61	3.13

Size (in)	Dimensions in Inches – 149 Series with Gear Operator									
	A	B	C	D	G	H	J	K	P	ØR
8	7.13	10.25	3.38	8.00	2.50	1.62	9.48	3.25	1.50	11.88
10	8.25	11.50	3.38	8.00	2.75	1.62	9.48	3.25	1.50	11.88
12	9.75	13.25	3.38	8.00	3.13	1.62	9.48	3.25	1.50	11.88

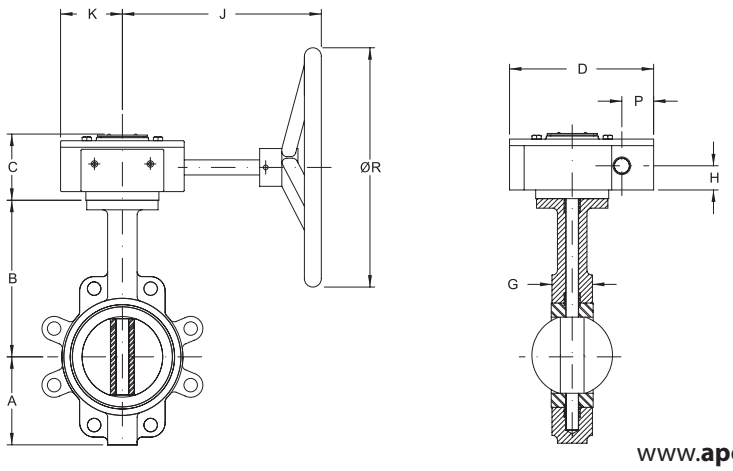

CERTIFIED LEAD FREE NSF/ANSI 372 – MODEL NUMBER

WD	141	06	B	E	1	1 -S
MODEL	**SERIES**	**SIZE (IN.)**	**DISC MATERIAL**	**SEAT MATERIAL**	**SHAFT**	**OPERATOR**
LD = Lug Body (Ductile Iron) **WD** = Wafer Body (Ductile Iron) (2" - 12" Only)	**141** = Apollo International™ **145** = Assembled & Tested in USA	**02** = 2" **25** = 2.5" **03** = 3" **04** = 4" **05** = 5" **06** = 6" **08** = 8" **10** = 10" **12** = 12" **14** = 14" **16** = 16" **18** = 18" **20** = 20" **24** = 24"	**B** = Aluminum Bronze **D** = Ductile Iron A536 Nickel Plated **S** = Stainless Steel, CF8M	**E** = Black EPDM** -20° F to 250° F *Intermittent* 225° F - *Continuous* -39° C to 121° C **N** = Black BUNA-N** 10° F to 180° F -12° C to 82° C **V** = Black Viton® B † -20° F to 300° F -29° C to 149° C (145 Series Only) ** *FDA Food Grade*	**1**= Std. 416 SS	**0** = Bare Shaft **1** = 10 Position Handle **2** = Gear Operator - Direct Mount **3** = Infinite Position Handle **4** = Locking Handle **5** = Gear Operator w/ Chainwheel **7** = Locking Gear Operator **8** = Locking Gear Operator w/Chainwheel **-SF**= Silicone Free Assembly (145 Series Only)

Larger sizes available. Contact Customer Support.

NOTES:

- **Certification** - Product complies with NSF/ANSI 372 Water Quality and NSF/ANSI 372 lead content requirements for "lead free" plumbing as defined by the U.S. Safe Drinking Water Act that took effect January 4, 2014. †

†Viton is primarily used for process applications, and has not been included in the scope of our Lead Free approvals

EXAMPLE:
WD141-06-BE-11: 6" WD141 Series, Ductile Iron Wafer Body, Aluminum Bronze Disc, Black EPDM Seat, 416 SS Shaft with 10 Position Handle

How to Order LC149 Butterfly Valves - Contractor Grade

CERTIFIED LEAD FREE NSF/ANSI 372 – MODEL NUMBER

LC149	06	1
SERIES	**SIZE (IN.)**	**OPERATOR**
LC149 = Cast Iron Lug Body Aluminum Bronze Disc 416 SS Shaft Black EPDM Seat	**02** = 2" **25** = 2.5" **03** = 3" **04** = 4" **05** = 5" **06** = 6" **08** = 8" **10** = 10" **12** = 12"	**1** = 10 Position Handle (2" - 12") **2** = Gear Operator (8" - 12" only)

EXAMPLE:
LC149-06-1: 6" LC149 Series, Cast Iron Body, Aluminum Bronze Disc, Black EPDM Seat, 416 SS Shaft with 10 Position Handle

NOTES:

- **Certification** - Product complies with NSF/ANSI 372 Water Quality and NSF/ANSI 372 lead content requirements for "lead free" plumbing as defined by the U.S. Safe Drinking Water Act that took effect January 4, 2014.

Pricing

NOTE: Pricing of valves and options may be accessed through published Price LIst BFPL9000 or by Authorized Apollo Online users.

DOUBLE OFFSET HIGH PERFORMANCE
BUTTERFLY VALVES
apollo international®

SERIES 215 | 230 | 260 CERTIFIED LEADFREE

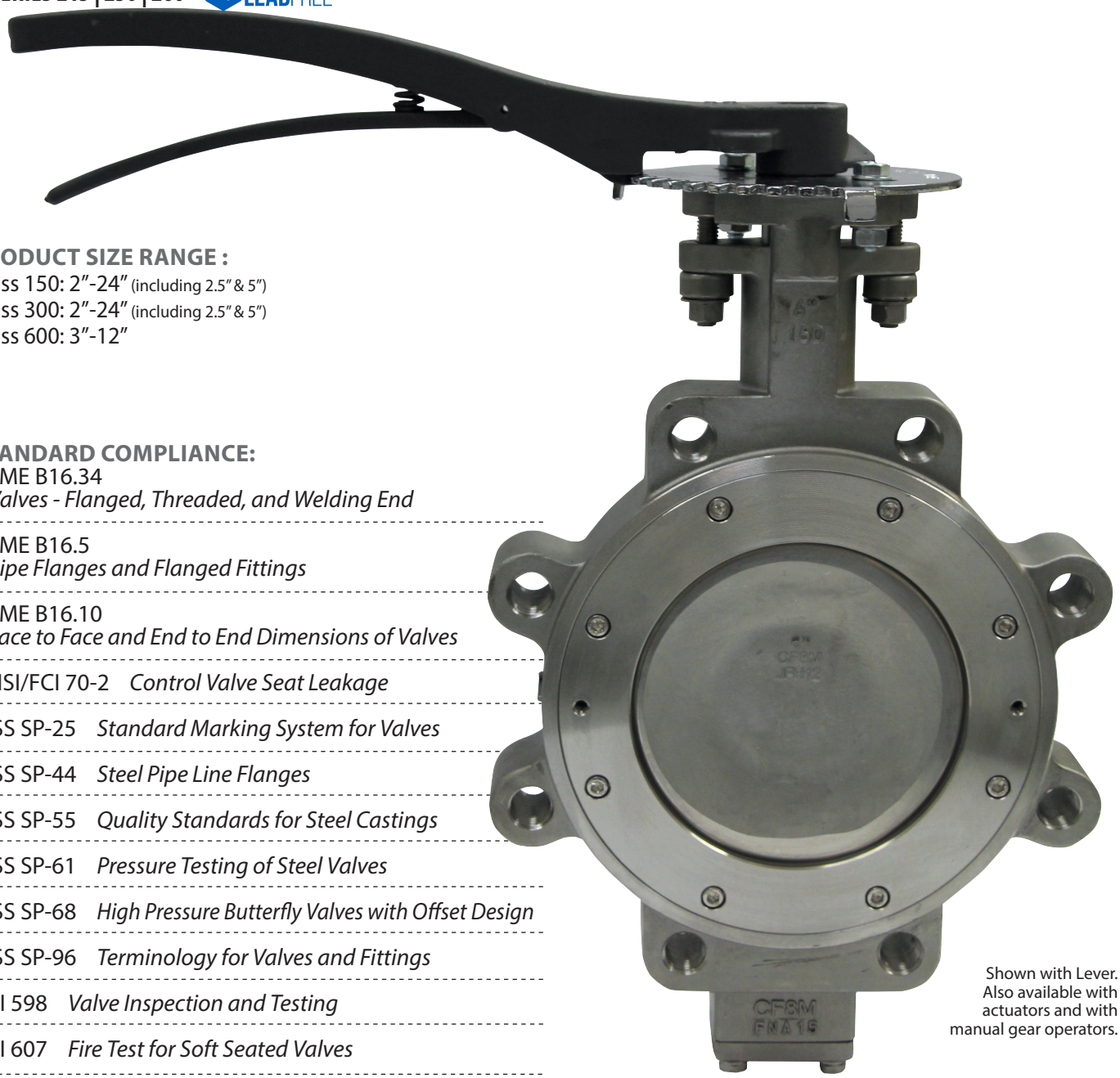

Shown with Lever. Also available with actuators and with manual gear operators.

Resilient, fire safe and metal seat configurations available.

PRODUCT SIZE RANGE :
Class 150: 2"-24" (including 2.5" & 5")
Class 300: 2"-24" (including 2.5" & 5")
Class 600: 3"-12"

STANDARD COMPLIANCE:
ASME B16.34
Valves - Flanged, Threaded, and Welding End

ASME B16.5
Pipe Flanges and Flanged Fittings

ASME B16.10
Face to Face and End to End Dimensions of Valves

ANSI/FCI 70-2 *Control Valve Seat Leakage*

MSS SP-25 *Standard Marking System for Valves*

MSS SP-44 *Steel Pipe Line Flanges*

MSS SP-55 *Quality Standards for Steel Castings*

MSS SP-61 *Pressure Testing of Steel Valves*

MSS SP-68 *High Pressure Butterfly Valves with Offset Design*

MSS SP-96 *Terminology for Valves and Fittings*

API 598 *Valve Inspection and Testing*

API 607 *Fire Test for Soft Seated Valves*

API 609 *Butterfly Valves: Double Flanged, Lug and Wafer Type*

NSF/ANSI 61 (2"-24", Stainless 215 & 230)
Drinking Water System Components - Health Effects

CE marked and documented valves that conform to the European Pressure Equipment Directive (PED) 97/23/EC are available in ANSI Class 150/300/600 including resilient, fire safe and metal seat configurations (sizes 2"-24" only).

CRN No. 0C17459.5CL

ISO 5211 Mounting Flange
Universal mounting dimensions simplify valve actuation. Allows for direct mounting of several actuators.

Rocker Packing Gland
Shaped packing gland compensates for uneven adjustment of gland nuts.

Stem Packing
V-ring PTFE, UHMWPE or flat graphite provides positive sealing.

Extended Neck
Allows for 2" of pipe insulation.

Body
Robust one-piece casting in WCB carbon steel or CF8M stainless steel. Available in wafer & lug style.

Positive Cast Disc Stop
Prevents seat damage from over-travel of the disc beyond the closed position. (not visible)

Jacking Taps
Allows the use of seat retainer bolts to aid in retainer removal.

Seat Retainer
Reliable multi-bolt retainer holds and supports the seat. Standard valves are suitable for bi-directional dead-end service at the full pressure-temperature rating of the valve. Same material as body material.

Corrosion Protection
Polyamide epoxy primer with high performance polyurethane topcoat is the standard finish for carbon steel valve bodies.

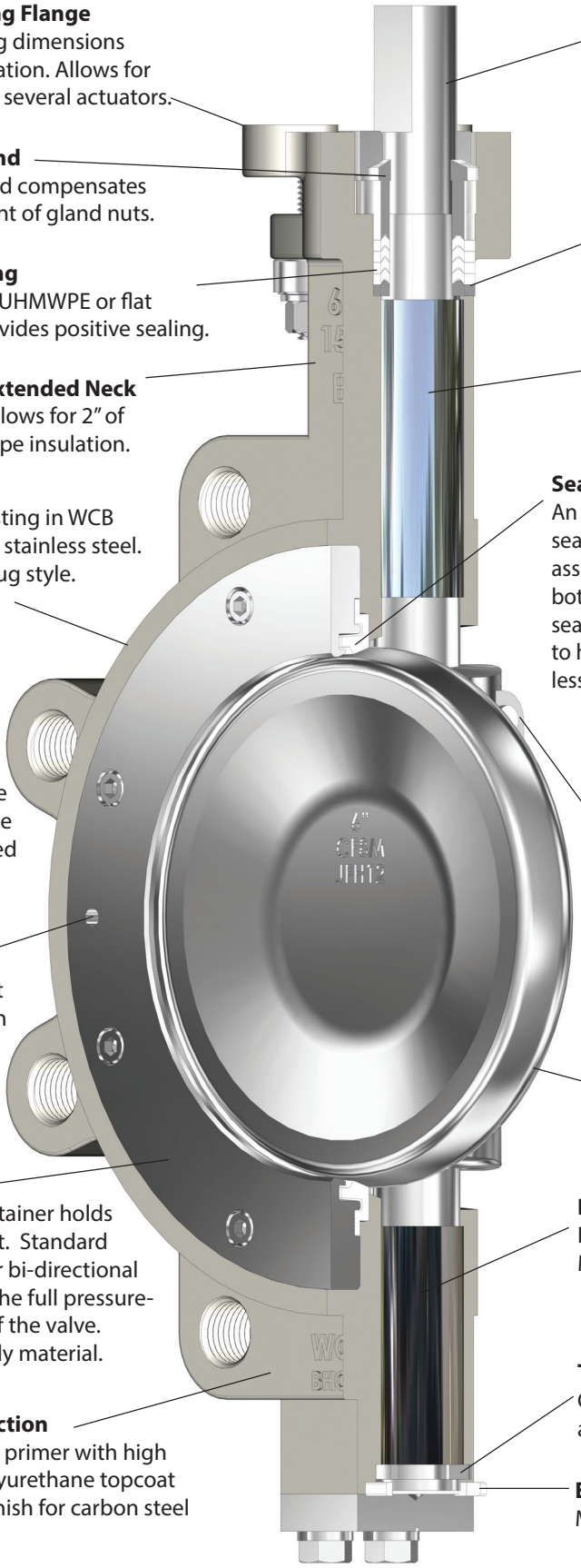

Stem (blowout proof)
17-4 PH stainless steel stem with high strength, and good corrosion resistance. Designed per API 609 standard.

Anti-Extrusion Ring (under stem seals)
Prevents the extrusion of stem seals, maintaining optimum seal.

Bearing (upper)
Full length provides maximum stem support. Made of 316 SS/PTFE

Seat
An advanced free floating, pressure assisted, solid seat design provides an interference and pressure assisted seal. This creates a positive seal under both low and high pressure requirements. The seat does not rely on any secondary components to hold it in place, assuring longer service life with less maintenance.

Tangential Disc Pins
17-4 PH stainless steel disc pins are tangentially positioned, placing them in compression rather than shear. This robust joint design eliminates potential failure of the disc-stem connection.

Disc
Standard material is 316 stainless steel.

Bearing (lower)
Full length provides maximum stem support. Made of 316 SS/PTFE

Thrust Ring
Centers the disc. Ensures tight shutoff and long service life. Made of 316 SS.

End Cap Seal
Made of PTFE, UHMWPE or graphite.

CLASS 150 - 2" THROUGH 24" | CLASS 300 - 2" THROUGH 24" | CLASS 600 - 3" THROUGH 12"

STANDARD MATERIAL LIST

	Part	MATERIAL
1	Body	A351-CF8M or A216-WCB
2	Disc	A351-CF8M
3	Seat	RTFM (TFM 1700)*
4	Seat Retainer	A351-CF8M or A216-WCB
5	Seat Retainer Bolt	Stainless Steel 316
6	Stem	17-4PH
7	Disc Pin	17-4PH
8	End Cap Bolt	Stainless Steel 316
9	Washer	Stainless Steel 316
10	End Cap	A351-CF8M or A216-WCB
11	Spacer	PTFE
12	End Cap Seal	PTFE
13	Thrust Ring	Stainless Steel 316
14	Lower Bearing	Stainless Steel 316/PTFE
15	Upper Bearing	Stainless Steel 316/PTFE
16	Anti-Extrusion Ring	Stainless Steel 316
17	Stem Packing	PTFE
18	Packing Gland	Stainless Steel 316
19	Gland Nut	Stainless Steel 316
20	Washer	Stainless Steel 316
21	Disc Spring	Stainless Steel 304
22	Disc Spring Retainer	Stainless Steel 316
23	Gland Studs	Stainless Steel 316
24	Gland Plate	A351-CF8M or A216-WCB

* TFM 1700 modified PTFE is a next-generation PTFE with improved properties. Added glass further improves the seat providing greater wear resistance and a higher modulus.

NOTE: Class 150 Size 10" & larger have keyed stem.
Class 300 Size 8" & larger have keyed stem.
Class 600 Size 6" & larger have keyed stem.

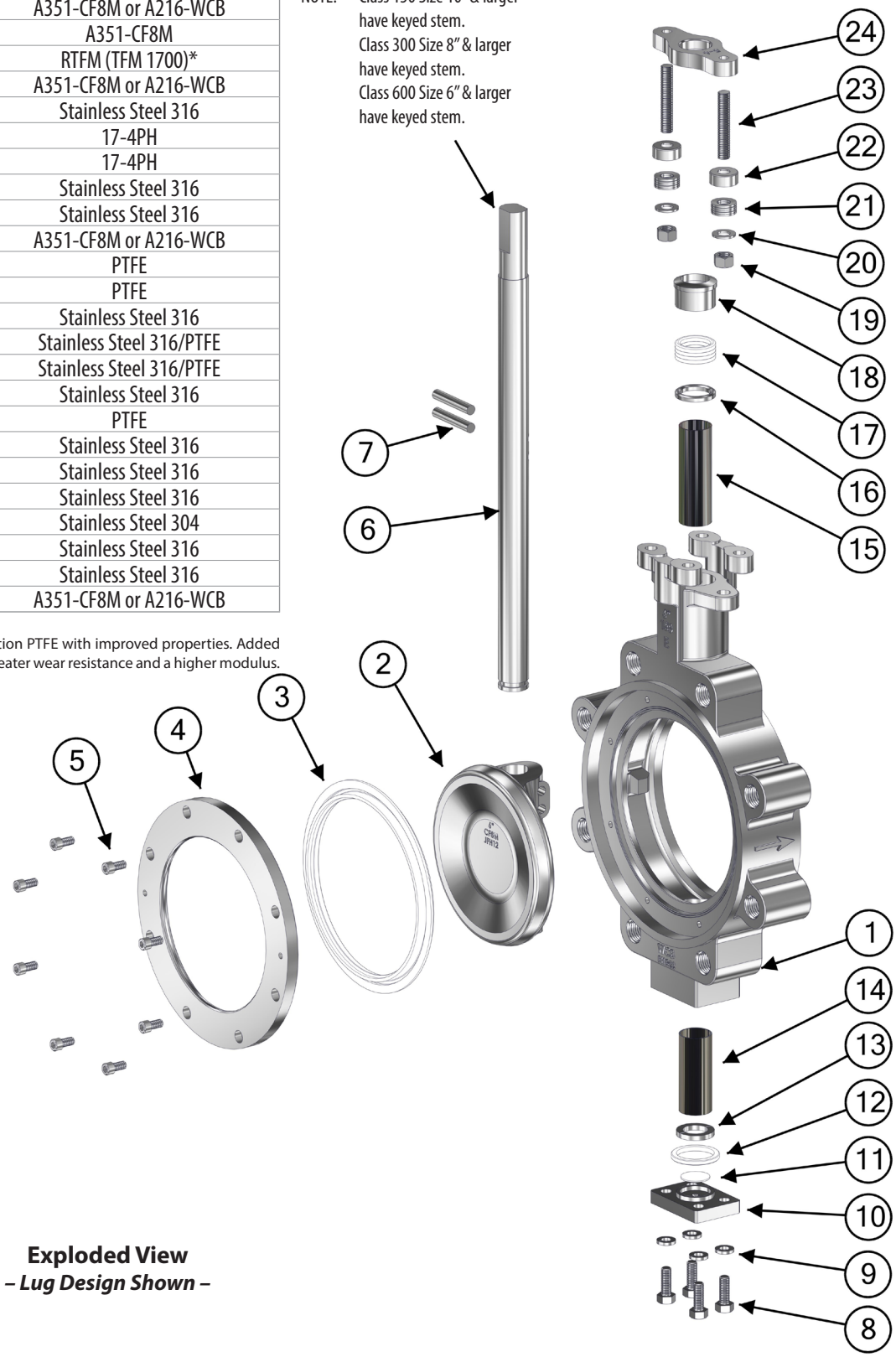

Exploded View
– Lug Design Shown –

CLASS 150 - 2" THROUGH 24" | CLASS 300 - 2" THROUGH 24" | CLASS 600 - 3" THROUGH 12"

STANDARD MATERIAL LIST

	Part	MATERIAL
1	Body	A351-CF8M or A216-WCB
2	Disc	A351-CF8M
3	Body Seal	Graphite
4	Metal Seat	Inconel 625
5	Seat	RTFM (TFM 1700)*
6	Seat Retainer	A351-CF8M or A216-WCB
7	Seat Retainer Bolt	Stainless Steel 316
8	Stem	17-4PH
9	Disc Pin	17-4PH
10	End Cap Bolt	Stainless Steel 316
11	Washer	Stainless Steel 316
12	End Cap	A351-CF8M or A216-WCB
13	Spacer	PTFE
14	End Cap Seal	Graphite
15	Thrust Ring	Stainless Steel 316
16	Lower Bearing	Stainless Steel 316/PTFE
17	Upper Bearing	Stainless Steel 316/PTFE
18	Anti-Extrusion Ring	Stainless Steel 316
19	Stem Packing	Graphite
20	Packing Gland	Stainless Steel 316
21	Gland Nut	Stainless Steel 316
22	Washer	Stainless Steel 316
23	Disc Spring	Stainless Steel 304
24	Disc Spring Retainer	Stainless Steel 316
25	Gland Studs	Stainless Steel 316
26	Gland Plate	A351-CF8M or A216-WCB

* TFM 1700 modified PTFE is a next-generation PTFE with improved properties. Added glass further improves the seat providing greater wear resistance and a higher modulus.

NOTE: Class 150 Size 10" & larger have keyed stem.
Class 300 Size 8" & larger have keyed stem.
Class 600 Size 6" & larger have keyed stem.

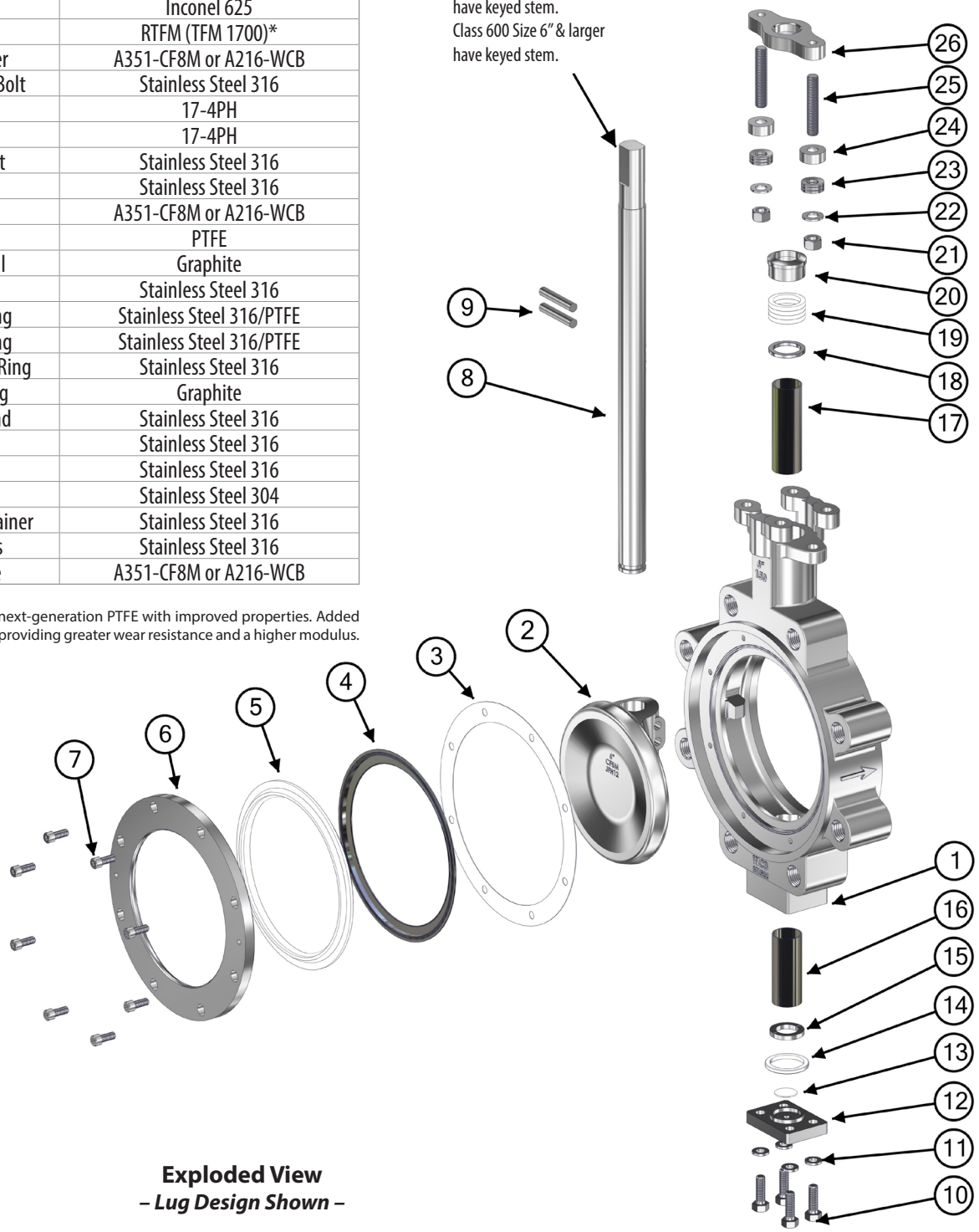

Exploded View
– Lug Design Shown –

STANDARD MATERIAL LIST

	Part	MATERIAL
1	Body	A351-CF8M or A216-WCB
2	Disc	A351-CF8M - Nitrided
3	Body Seal	Synthetic Gasket
4	Seat	Stainless Steel 316 - Nitrided
5	Seat Retainer	A351-CF8M or A216-WCB
6	Stem	17-4 PH
7	Disc Pin	17-4 PH
8	End Cap Bolt	Stainless Steel 316
9	Washer	Stainless Steel 316
10	End Cap	A351-CF8M or A216-WCB
11	Spacer	Graphite
12	End Cap Seal	Graphite
13	Thrust Ring	Stainless Steel 316
14	Lower Bearing	Stainless Steel 316 / PTFE
15	Upper Bearing	Stainless Steel 316 / PTFE
16	Anti-Extrusion Ring	Stainless Steel
17	Stem Packing	Graphite
18	Packing Gland	Stainless Steel 316
19	Gland Nut	Stainless Steel 316
20	Washer	Stainless Steel 316
21	Disc Spring	Stainless Steel 304
22	Disc Spring Retainer	Stainless Steel 316
23	Gland Studs	Stainless Steel 316
24	Gland Plate	A351-CF8M or A216-WCB

NOTE: Class 150 Size 10" & larger have keyed stem.
Class 300 Size 8" & larger have keyed stem.
Class 600 Size 6" & larger have keyed stem.

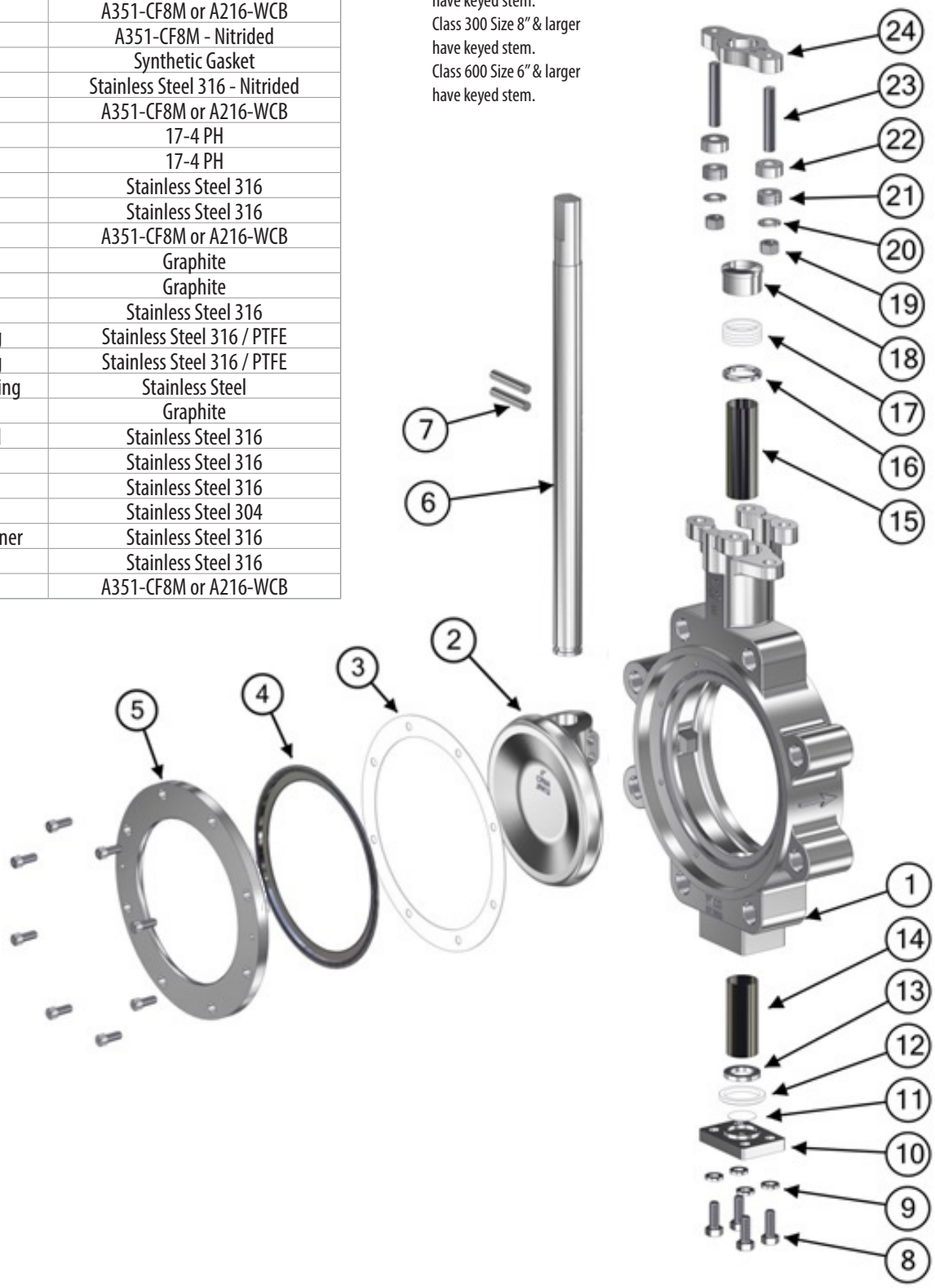

CLASS 150 – 2" THROUGH 24"

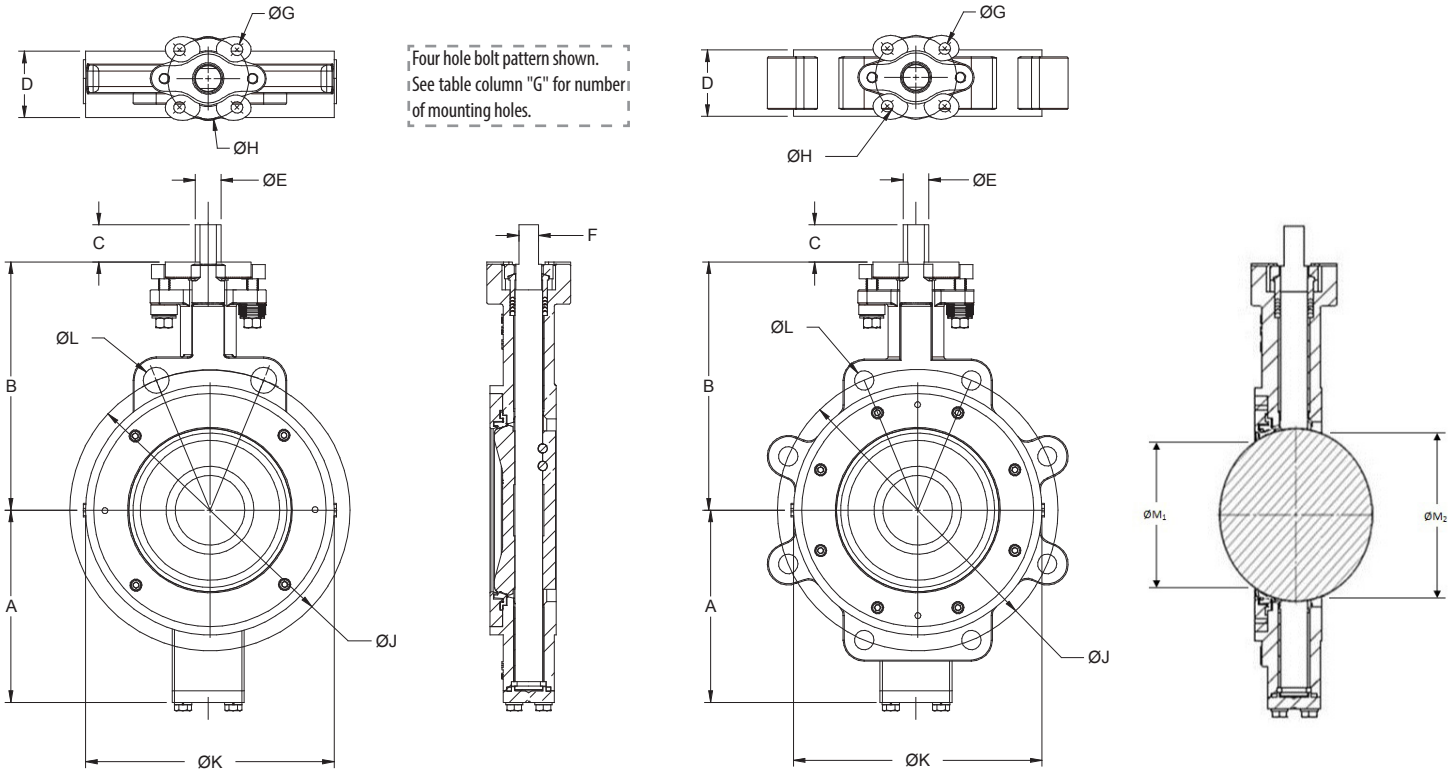

WAFER **LUG**

150 CLASS DOUBLE-D AND KEYED STEM

SIZE INCHES	SIZE DN	DIMENSIONS IN INCHES														
		A	B	C	D	ØE	F	KEY	ØG	ØH**	ØJ	ØK	ØL Wafer	ØL Lug	ØM1	ØM2
2	50	3.622	5.276	1.102	1.693	0.476	0.354	--	4 x 0.394	2.756 (F07)	4.75	4.09	2 x 0.669	4x5/8"-11UNC-2B	0.50	1.64
2.5	65	4.016	5.787	1.102	1.850	0.555	0.433	--	4 x 0.394	2.756 (F07)	5.50	4.72	2 x 0.748	4x5/8"-11UNC-2B	1.48	2.06
3	80	4.331	6.142	1.102	1.890	0.555	0.433	--	4 x 0.394	2.756 (F07)	6.00	4.92	2 x 0.748	4x5/8"-11UNC-2B	1.67	2.58
4	100	4.764	7.008	1.260	2.126	0.713	0.551	--	4 x 0.394	2.756 (F07)	7.50	6.10	2 x 0.748	8x5/8"-11UNC-2B	2.76	3.46
5	125	5.591	7.598	1.260	2.244	0.874	0.669	--	4 x 0.394	2.756 (F07)	8.50	7.24	2 x 0.874	8x3/4"-10UNC-2B	3.94	4.49
6	150	6.496	8.386	1.259	2.244	0.874	0.669	--	4 x 0.394	2.756 (F07)	9.50	8.43	2 x 0.874	8x3/4"-10UNC-2B	5.02	5.46
8	200	7.165	9.449	1.260	2.520	0.992	0.748	--	4 x 0.551	4.921 (F12)	11.75	10.55	2 x 0.874	8x3/4"-10UNC-2B	6.95	7.26
10	250	8.386	10.827	2.165	2.795	1.102	--	0.313	4 x 0.551	4.921 (F12)	14.25	12.68	2 x 0.984	12x7/8"-9UNC-2B	8.85	9.15
12	300	10.236	12.283	2.165	3.189	1.417	--	0.375	4 x 0.551	4.921 (F12)	17.00	14.92	2 x 0.984	12x7/8"-9UNC-2B	10.37	10.70
14	350	11.811	13.307	2.559	3.622	1.654	--	0.437	4 x 0.709	5.512 (F14)	18.75	16.14	2 x 1.118	12x1"-8UNC-2B	11.89	12.25
16	400	13.307	15.354	3.150	4.016	1.969	--	0.500	4 x 0.866	6.496 (F16)	21.25	18.43	2 x 1.118	16x1"-8UNC-2B	13.59	13.94
18	450	14.803	16.732	3.149	4.488	1.969	--	0.500	4 x 0.866	6.496 (F16)	22.75	20.94	4 x 1.240	16x1-1/8"-8UN-2B	15.65	15.91
20	500	15.748	17.717	4.331	5.000	2.362	--	0.625	4 x 0.866	6.496 (F16)	25.00	22.99	4 x 1-1/8"-8UN-2B	20x1-1/8"-8UN-2B	17.50	17.72
24	600	18.622	20.787	4.331	6.063	2.559	--	0.750	8 x 0.748	10.000 (F25)	29.50	27.24	4 x 1-1/4"-8UN-2B	20x1-1/4"-8UN-2B	20.94	21.01
*30	750	23.228	25.315	4.331	7.480	3.150	--	0.875	8 x 0.748	10.000 (F25)	36.00	36.42	--	28X1-1/4"-8UN-2B	26.22	26.28
*36	850	26.575	28.740	4.331	7.992	3.150	--	0.875	8 x 0.906	11.732 (F30)	42.75	45.28	--	32X1-1/2"-8UN-2B	32.29	32.35

30" & 36" are Class 150 Lug Style only.
***** ISO 5211 mounting/drilling pattern (F size) shown in parentheses.***

CLASS 300 – 2" THROUGH 24"

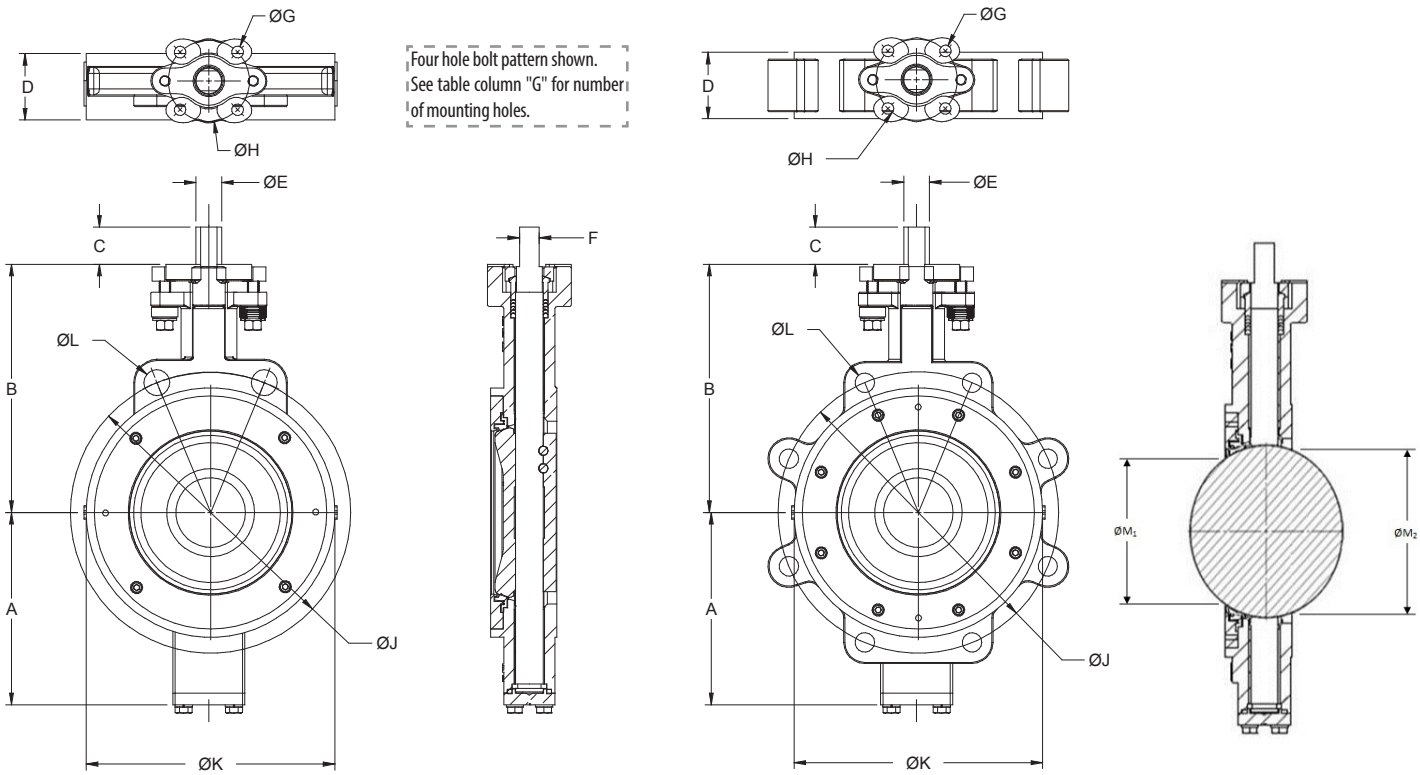

WAFER **LUG**

300 CLASS DOUBLE-D AND KEYED STEM

SIZE INCHES	SIZE DN	DIMENSIONS IN INCHES														
		A	B	C	D	ØE	F	KEY	ØG	ØH**	ØJ	ØK	ØL Wafer	ØL Lug	ØM1	ØM2
2	50	3.622	5.276	1.102	1.693	0.476	0.354	--	4 x 0.394	2.756 (F07)	5.00	4.17	2 x 0.709	8x5/8"-11UNC-2B	0.50	1.64
2.5	65	4.016	5.787	1.102	1.850	0.555	0.433	--	4 x 0.394	2.756 (F07)	5.88	4.72	2 x 0.874	8x3/4"-10UNC-2B	1.48	2.06
3	80	4.331	6.142	1.102	1.890	0.555	0.433	--	4 x 0.394	2.756 (F07)	6.62	4.92	2 x 0.874	8x3/4"-10UNC-2B	1.67	2.58
4	100	4.764	7.008	1.260	2.126	0.713	0.551	--	4 x 0.394	2.756 (F07)	7.88	6.10	2 x 0.874	8x3/4"-10UNC-2B	2.76	3.46
5	125	5.591	7.598	1.260	2.244	0.874	0.669	--	4 x 0.472	4.016 (F10)	9.25	7.24	2 x 0.874	8x3/4"-10UNC-2B	3.94	4.49
6	150	6.496	8.386	1.259	2.323	0.874	0.669	--	4 x 0.472	4.016 (F10)	10.62	8.43	2 x 0.874	12x3/4"-10UNC-2B	4.93	5.46
8	200	8.268	10.157	2.165	2.874	1.102	--	0.313	4 x 0.551	4.921 (F12)	13.00	10.55	2 x 0.984	12x7/8"-9UNC-2B	6.73	7.19
10	250	9.449	11.417	2.165	3.268	1.417	--	0.375	4 x 0.551	4.921 (F12)	15.25	12.72	4 x 1"-8UNC-2B	16x1"-8UNC-2B	8.44	8.85
12	300	10.63	12.795	2.559	3.662	1.654	--	0.437	4 x 0.709	5.512 (F14)	17.75	15.04	4 x 1-1/8"-8UN-2B	16x1-1/8"-8UN-2B	10.17	10.62
14	350	12.756	14.764	3.150	4.606	1.969	--	0.500	4 x 0.866	6.496 (F16)	20.25	16.14	4 x 1-1/8"-8UN-2B	20x1-1/8"-8UN-2B	11.55	11.89
16	400	14.37	16.732	3.149	5.236	1.969	--	0.500	4 x 0.866	6.496 (F16)	22.50	18.43	4 x 1-1/4"-8UN-2B	20x1-1/4"-8UN-2B	13.21	13.55
18	450	16.043	18.209	4.331	5.866	2.362	--	0.625	8 x 0.748	10.000 (F25)	24.75	20.94	4 x 1-1/4"-8UN-2B	24x1-1/4"-8UN-2B	15.36	15.54
20	500	17.795	19.882	4.331	6.260	2.835	--	0.750	8 x 0.748	10.000 (F25)	27.00	22.99	4 x 1-1/4"-8UN-2B	24x1-1/4"-8UN-2B	16.93	17.27
24	600	20.315	22.835	4.331	7.126	3.150	--	0.875	8 x 0.748	10.000 (F25)	32.00	27.24	4 x 1-1/2"-8UN-2B	24x1-1/2"-8UN-2B	20.57	20.57

*** ISO 5211 mounting/drilling pattern (F size) shown in parentheses.*

CLASS 600 – 3″ THROUGH 12″

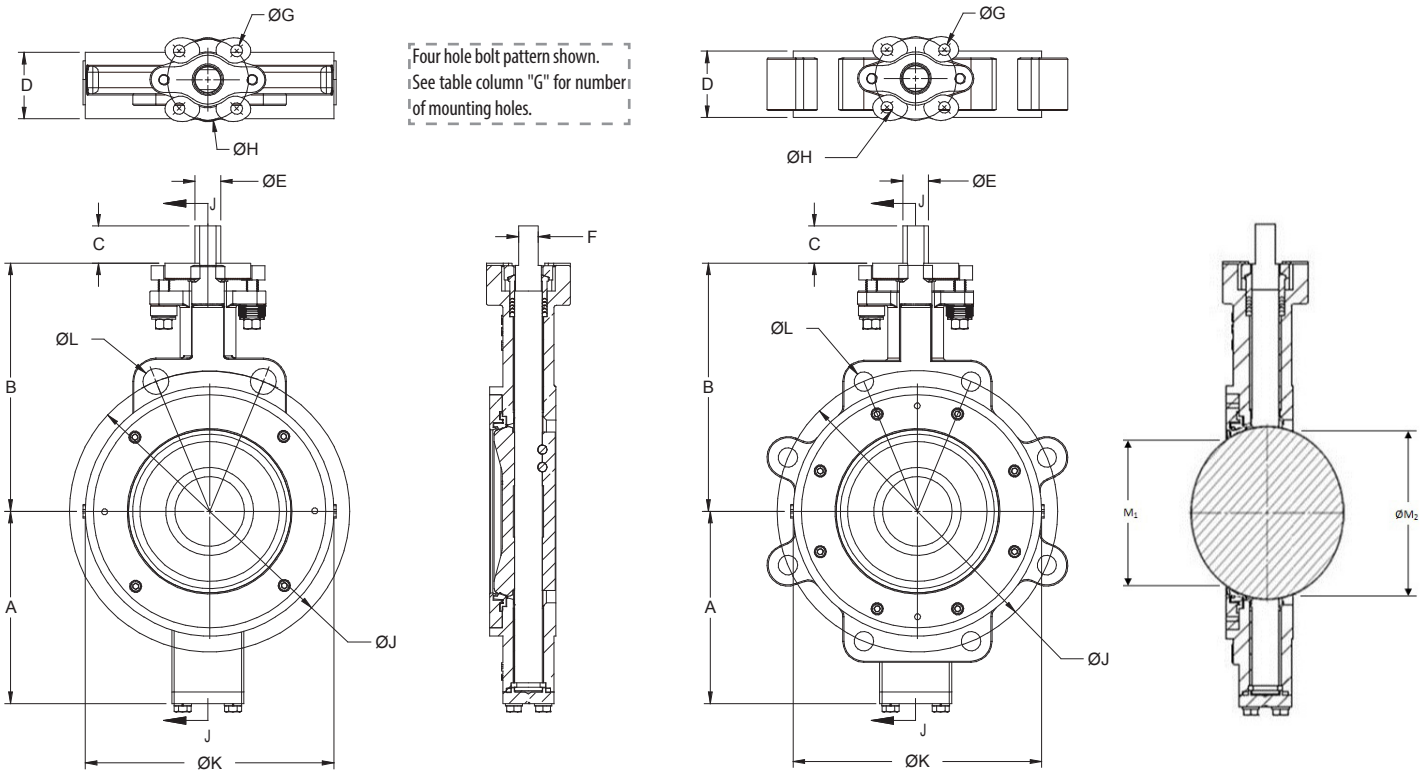

WAFER **LUG**

600 CLASS DOUBLE-D AND KEYED STEM

SIZE INCHES	SIZE DN	DIMENSIONS IN INCHES														
		A	B	C	D	ØE	F	KEY	ØG	ØH**	ØJ	ØK	ØL Wafer	ØL Lug	ØM1	ØM2
3	80	4.705	6.496	1.260	2.126	0.713	0.551	--	4 x 0.394	2.756 (F07)	6.62	5.71	2 x 0.866	8 x 3/4"-10 UNC-2B	1.87	2.68
4	100	5.748	7.717	1.260	2.520	0.874	0.669	--	4 x 0.551	4.921 (F12)	8.50	6.85	2 x 0.984	8 x 7/8"-9 UNC-2B	2.79	3.37
6	150	7.953	9.724	2.165	3.071	1.417	--	0.375	4 x 0.551	4.921 (F12)	11.50	9.45	4 x 1″-8UNC-2B	12 x 1"-8 UNC-2B	4.52	5.26
8	200	9.528	11.614	3.150	4.016	1.890	--	0.500	4 x 0.906	6.496 (F16)	13.75	11.65	4 x 1-1/8″-8UN-2B	12 x 1-1/8"-8 UN-2B	6.14	6.82
10	250	11.024	13.386	3.150	4.606	1.969	--	0.500	4 x 0.906	6.496 (F16)	17.00	13.86	4 x 1-1/4″-8UN-2B	16 x 1-1/4"-8 UN-2B	7.99	8.61
12	300	12.913	15.354	4.331	5.512	2.362	--	0.625	8 x 0.709	10.000 (F25)	19.25	16.34	4 x 1-1/4″-8UN-2B	20 x 1-1/4"-8 UN-2B	9.56	10.13

(5″ size not available)

***** ISO 5211 mounting/drilling pattern (F size) shown in parentheses.***

Class 150 –RTFM & UHMWPE Seat

Valve Size		Gear	Dimensions in Inches						
Inches	DN	Ratio	A	B	C	D	E	F	G
2"	50	37:1	2.24	2.11	7.87	11.81	2.09	1.14	8.82
2.5"	65	37:1	2.24	2.11	7.87	11.81	2.09	1.14	8.82
3"	80	37:1	2.24	2.11	7.87	11.81	2.09	1.14	8.82
4"	100	37:1	2.24	2.11	7.87	11.81	2.09	1.14	12.82
5"	125	37:1	2.24	2.11	7.87	11.81	2.09	1.14	12.82
6"	150	37:1	2.24	2.11	7.87	11.81	2.09	1.14	12.82
8"	200	37:1	2.76	2.11	10.94	11.81	2.09	1.50	—
10"	250	37:1	2.76	2.11	10.94	11.81	2.09	1.50	—
12"	300	34:1	3.43	2.50	12.87	11.81	2.80	1.59	—
14"	350	55:1	4.06	4.39	13.07	15.75	4.11	1.93	—
16"	400	55:1	4.06	4.39	13.07	15.75	4.11	1.93	—
18"	450	55:1	4.06	4.39	13.07	15.75	4.11	1.93	—
20"	500	55:1	4.06	4.39	13.07	15.75	4.11	1.93	—
24"	600	52:1	4.96	4.92	13.11	15.75	5.12	2.40	—

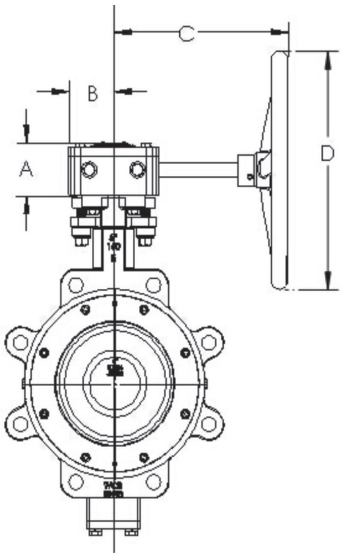

with Manual Gear

Class 300 –RTFM & UHMWPE Seat

Valve Size		Gear	Dimensions in Inches						
Inches	DN	Ratio	A	B	C	D	E	F	G
2"	50	37:1	2.24	2.11	7.87	11.81	2.09	1.14	8.82
2.5"	65	37:1	2.24	2.11	7.87	11.81	2.09	1.14	8.82
3"	80	37:1	2.24	2.11	7.87	11.81	2.09	1.14	8.82
4"	100	37:1	2.24	2.11	7.87	11.81	2.09	1.14	12.82
5"	125	37:1	2.76	2.11	10.94	11.81	2.09	1.50	12.82
6"	150	37:1	2.76	2.11	10.94	11.81	2.09	1.50	12.82
8"	200	34:1	3.43	2.50	12.87	11.81	2.80	1.59	—
10"	250	34:1	3.43	2.50	12.87	11.81	2.80	1.59	—
12"	300	55:1	4.06	4.39	13.07	15.75	4.11	1.93	—
14"	350	55:1	4.06	4.39	13.07	15.75	4.11	1.93	—
16"	400	55:1	4.06	4.39	13.07	15.75	4.11	1.93	—
18"	450	52:1	4.96	4.92	13.11	15.75	5.12	2.40	—
20"	500	832:1	8.86	5.91	15.04	17.72	9.02	3.23	—
24"	600	832:1	8.86	5.91	15.04	17.72	9.02	3.23	—

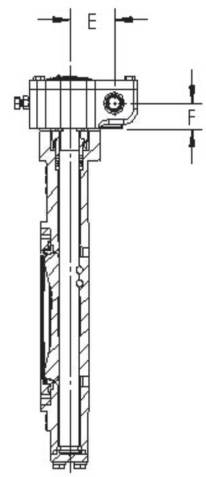

with Manual Gear

Class 600 –RTFM & UHMWPE Seat

Valve Size		Gear	Dimensions in Inches					
Inches	DN	Ratio	A	B	C	D	E	F
3"	80	37:1	2.24	2.11	7.87	11.81	2.09	1.14
4"	100	37:1	2.76	2.11	10.94	11.81	2.09	1.50
6"	150	37:1	2.76	2.11	10.94	11.81	2.09	1.50
8"	200	55:1	4.06	4.39	13.07	15.75	4.11	1.93
10"	250	55:1	4.06	4.39	13.07	15.75	4.11	1.93
12"	300	52:1	4.96	4.92	13.11	15.75	5.12	2.40

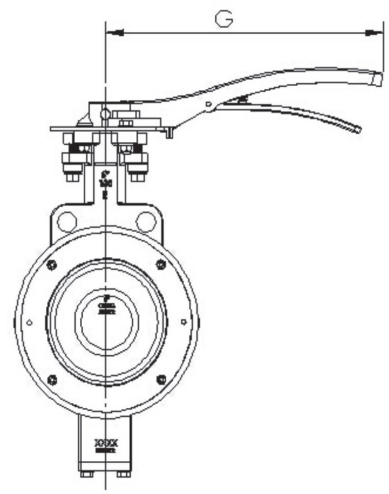

with Handle

Class 150 –Fire Safe & Metal Seat

Valve Size		Gear	Dimensions in Inches						
Inches	DN	Ratio	A	B	C	D	E	F	G
2"	50	37:1	2.24	2.11	7.87	11.81	2.09	1.14	8.82
2.5"	65	37:1	2.24	2.11	7.87	11.81	2.09	1.14	8.82
3"	80	37:1	2.24	2.11	7.87	11.81	2.09	1.14	8.82
4"	100	37:1	2.24	2.11	7.87	11.81	2.09	1.14	12.82
5"	125	37:1	2.24	2.11	7.87	11.81	2.09	1.14	12.82
6"	150	37:1	2.24	2.11	7.87	11.81	2.09	1.14	12.82
8"	200	37:1	2.76	2.11	10.94	11.81	2.09	1.50	—
10"	250	34:1	3.43	2.50	12.87	11.81	2.80	1.59	—
12"	300	55:1	4.06	4.39	13.07	15.75	4.11	1.93	—
14"	350	55:1	4.06	4.39	13.07	15.75	4.11	1.93	—
16"	400	55:1	4.06	4.39	13.07	15.75	4.11	1.93	—
18"	450	52:1	4.96	4.92	13.11	15.75	5.12	2.40	—
20"	500	52:1	4.96	4.92	13.11	15.75	5.12	2.40	—
24"	600	832:1	8.86	5.91	15.04	17.72	9.02	3.23	—

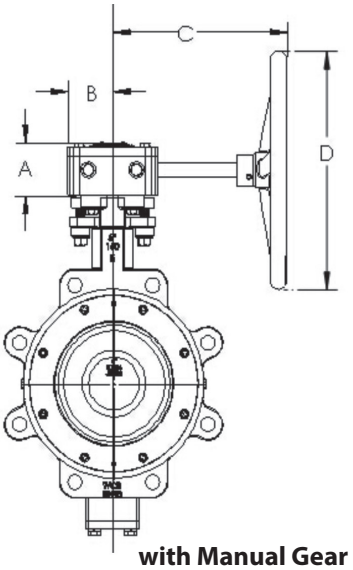

with Manual Gear

Class 300 –Fire Safe & Metal Seat

Valve Size		Gear	Dimensions in Inches						
Inches	DN	Ratio	A	B	C	D	E	F	G
2"	50	37:1	2.24	2.11	7.87	11.81	2.09	1.14	8.82
2.5"	65	37:1	2.24	2.11	7.87	11.81	2.09	1.14	8.82
3"	80	37:1	2.24	2.11	7.87	11.81	2.09	1.14	8.82
4"	100	37:1	2.24	2.11	7.87	11.81	2.09	1.14	12.82
5"	125	37:1	2.76	2.11	10.94	11.81	2.09	1.50	12.82
6"	150	37:1	2.76	2.11	10.94	11.81	2.09	1.50	12.82
8"	200	34:1	3.43	2.50	12.87	11.81	2.80	1.59	—
10"	250	55:1	4.06	4.39	13.07	15.75	4.11	1.93	—
12"	300	55:1	4.06	4.39	13.07	15.75	4.11	1.93	—
14"	350	52:1	4.96	4.92	13.11	15.75	5.12	2.40	—
16"	400	52:1	4.96	4.92	13.11	15.75	5.12	2.40	—
18"	450	832:1	8.86	5.91	15.04	17.72	9.02	3.23	—
20"	500	832:1	8.86	5.91	15.04	17.72	9.02	3.23	—
24"	600								

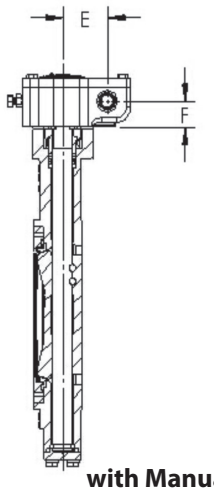

with Manual Gear

Class 600 –Fire Safe & Metal Seat

Valve Size		Gear	Dimensions in Inches					
Inches	DN	Ratio	A	B	C	D	E	F
3"	80	37:1	2.24	2.11	7.87	11.81	2.09	1.14
4"	100	34:1	3.43	2.50	12.87	11.81	2.80	1.59
6"	150	55:1	4.06	4.39	13.07	15.75	4.11	1.93
8"	200	55:1	4.06	4.39	13.07	15.75	4.11	1.93
10"	250	52:1	4.96	4.92	13.11	15.75	5.12	2.40
12"	300	832:1	8.86	5.91	15.04	17.72	9.02	3.23

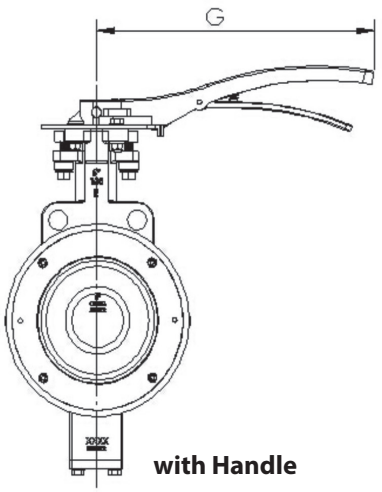

with Handle

DOUBLE OFFSET HIGH PERFORMANCE
BUTTERFLY VALVES

how to order high perforamce butterfly valves

2	15	L	06	C	S	P	8T	A	0
VALVE TYPE	**CLASS**	**VALVE STYLE**	**SIZE**	**BODY MATERIAL**	**DISC MATERIAL**	**STEM MATERIAL**	**SEAT MATERIAL**	**SPECIAL SERVICE**	**OPERATOR**
2 - Double Offset	**15** (150) **30** (300) **60** (600)[1]	**L** - Lug **W** - Wafer	**02** (2") **25** (2.5") **03** (3") **04** (4") **05** (5") **06** (6") **08** (8") **10** (10") **12** (12") **14** (14") **16** (16") **18** (18") **20** (20") **24** (24") **30** (30")[2] **36** (36")[2]	**C** - Carbon Steel **S** - 316 SS **A** - Alloy 20 **B** - 317 SS **H** - Hastelloy C **J** - Duplex **K** - Super Duplex **M** - Monel	**S** - 316 SS **A** - Alloy 20 **B** - 317 SS **H** - Hastelloy C **J** - Duplex **K** - Super Duplex **M** - Monel	**P** - 17-4 PH SS **A** - Alloy 20 **B** - 317 SS **H** - Hastelloy C **J** - Duplex **K** - Super Duplex **M** - Monel **S** - 316 SS	**8T** - RTFM (TFM 1700 w/Glass) **2F** - TFM/Inconel, Graphite Seals (Fire Safe) **2M** - 316SS (Metal Seated) **21** - UHMWPE [3]	**A** - Standard Apollo	**0** - Bare Stem **1** - Lever Operator[4] **2** - Worm Gear Operator **5** - Worm Gear Operator w/ Chain Wheel **7** - Locking Worm Gear Operator **8** - Locking Worm Gear Operator w/ Chain Wheel

Example:
215L06CSP8TA0: 6" Class 150 Lug, Carbon Steel Body, SS Disc, 17-4 PH Stem, TFM 1700 Seats, Standard Service, Bare Stem

[1] Class 600 valves available in sizes 3" through 12" (excluding 5" size)
[2] 215L Only
[3] UHMWPE not available in Class 600
[4] Standard handle can be locked in the full open or fully closed position.
Lever operators are available with 2"-12" class 150 valves (215), and 2"-10" class 300 valves (230)
See table for Lever Handle Availability & Maximum Differential Pressure

Safety Warning:
Gear operators are normally specified for larger high performance butterfly valves because the force of the pipeline flow on the disc can be too great to safely use a handle.

LEVER HANDLE AVAILABILITY & MAXIMUM DIFFERENTIAL PRESSURE

			SOFT SEAT (CODES: 8T & 21)		FIRE-SAFE SEAT (CODE: 2F)		METAL SEAT (CODE: 2M)	
			PSI	bar	PSI	bar	PSI	bar
Class 150	215	2"-6"	Full Rating		Full Rating		Full Rating	
		8"	150	10.3	Not Available		Not Available	
		10"-12"	50	3.4	Not Available		Not Available	
Class 300	230	2"-4"	Full Rating		Full Rating		Full Rating	
		6"-8"	150	10.3	Not Available		Not Available	
		10"	50	3.4	Not Available		Not Available	

Warranty and Limitations of Liability

Conbraco Industries, Inc. warranties, to its initial purchaser only, that its products which are delivered to the initial purchaser will be of the kind described in the order or pricelist and will be free of defects in workmanship or material for a period of TWO years from the date of delivery to you, our initial purchaser.

Should any failure to conform to this warranty appear within two years after the date of the initial delivery to our initial purchaser, Conbraco will, upon written notification thereof and substantiation that the goods have been stored, installed, maintained and operated in accordance with Conbraco's recommendations and standard industry practice, correct such defects by suitable repair or replacement at Conbraco's own expense.

THIS WARRANTY IS EXCLUSIVE AND IS IN LIEU OF ANY IMPLIED WARRANTY OF MERCHANTABILITY, FITNESS FOR A PARTICULAR PURPOSE OR OTHER WARRANTY OF QUALITY WHETHER EXPRESSED OR IMPLIED, EXCEPT THE WARRANTY OF TITLE AND AGAINST PATENT INFRINGEMENT. Correction of non-conformities, in the manner and for the period of time provided above, shall constitute fulfillment of all liabilities of Conbraco to our initial purchaser, with respect to the goods, whether based on contract, negligence, strict tort or otherwise. It is the intention of Conbraco Industries, Inc. that no warranty of any kind, whether express or implied, shall pass through our initial purchaser to any other person or corporation.

LIMITATION OF LIABILITY: Conbraco Industries, Inc. SHALL NOT UNDER ANY CIRCUMSTANCES BE LIABLE FOR SPECIAL OR CONSEQUENTIAL DAMAGES SUCH AS, BUT NOT LIMITED TO, DAMAGES OR LOSS OF OTHER PROPERTY OR EQUIPMENT, LOSS OF PROFITS OR REVENUE, COST OF CAPITAL, COST OF PURCHASED OR INITIAL PURCHASER , AND ALL OTHERS, SET FORTH HEREIN ARE EXCLUSIVE, AND THE LIABILITY OF CONBRACO WITH RESPECT TO SAME SHALL NOT, AS EXPRESSLY PROVIDED HEREIN, EXCEED THE PRICE OF THE GOODS UPON WHICH SUCH LIABILITY IS BASED.

NOTES

NOTES

Regional Management List now available online at **http://conbra.co/rmlist**

Apollo Valves
Made In The USA

704.841.6000
CUSTOMER SERVICE

www.**apollo**valves.com

Elkhart Products Corporation | EPC

800.395.7313
CUSTOMER SERVICE

www.**elkhart**products.com

LASCO Fittings, Inc.

800.776.2756
CUSTOMER SERVICE

www.**lasco**fittings.com

ABBR141G 07/16 1,500 iTek

AALBERTS INDUSTRIES