"Apollo" Valves SUBMITTAL SHEET

78-RV Series

Thermal Expansion Relief Valve

LEAD FREE



SOLDER **NPT** **PEX B** **PEX A**

5 YEAR WARRANTY MADE IN USA

LEAD FREE CERTIFIED

UPC

Job Name:	
Job Location:	
Engineer:	
Contractor:	
Tag:	
PO#:	
Rep:	
Wholesale Dist.:	

DESCRIPTION

The lead free* Apollo 78-RV Series Combination Water Heater Isolation Valve/IAPMO Approved Thermal Expansion Relief Device solves two code requirements while saving time, installation space and money! Ideal alternative to expansion tanks in residential plumbing systems. Made in the USA, featuring lead free* dezincification resistant brass and bronze materials.

PERFORMANCE RATING

- Ball Valve Maximum Pressure: 400 psi
- Relief Valve Factory Set and Sealed 125 psi Maximum
- Maximum Temperature: 210°F

APPROVALS

- IAPMO IGC 128-2008
- City of Los Angeles Registered
- NSF/ANSI 372 Lead Free
- CSA B125.1 & B125.3

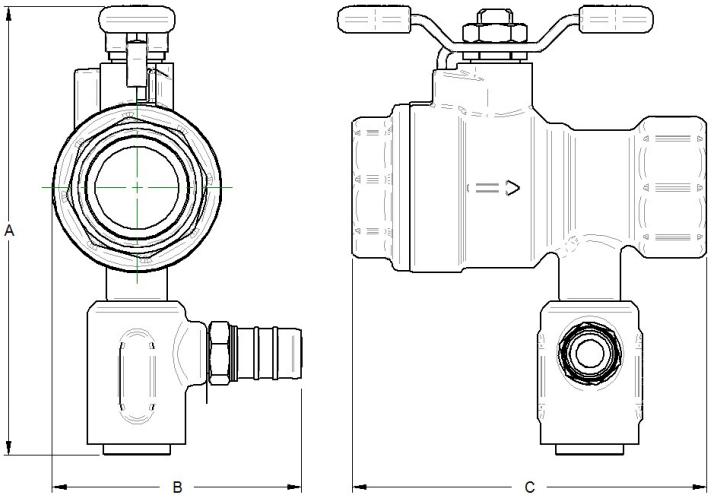

STANDARD MATERIAL LIST

LEVER	Steel, Plated, Plastisol
BODY	UNS C27451 Lead Free* DZR Brass
STEM BEARING	RTFE
STEM	UNS C27451 Lead Free* DZR Brass
RETAINER	UNS C27451 Lead Free* DZR Brass
BALL	UNS C27451 Lead Free* DRZ Brass, Chrome Plated
STEM PACKING	RTFE
SEAT	RTFE
BODY, RELIEF	UNS C89836 Lead Free* Bronze
SPRING, RELIEF	Stainless Steel
SEAT, RELIEF	Silicone Rubber

DIMENSIONS

PART NUMBER	SIZE (IN.)	DIMENSIONS (IN.)		
		A	B	C
78RV11*	3/4" NPT	4.1	2.6 max	3.2
78RV22*	3/4" SWT	4.1	2.6 max	3.6
78RV99*	3/4" PEX	4.1	2.6 max	3.5
78RV99X2*	3/4" PEX	4.1	2.6 max	4.1

PART NUMBER MATRIX

78RV	X	X	X	X	- XX
	END CONNECTION	END CONNECTION	RELIEF CONNECTION	PRESSURE (PSI)	OPTIONS**
	1 - NPT	1 - NPT	4 - 3/8" HOSE BARB	80	X2 - PEX A (F1960)
	2 - SOLDER	2 - SOLDER	5 - 1/2" PEX	100	
	9 - PEX	9 - PEX	6 - 3/8" COMPRESSION	125	
			7 - 1/2" NPT/SOLDER		

For Push Version (78RV-P) see SS1353

***If PEX A (F1960) is required, add –X2. Example: 78RV99580X2 – PEX A(F1960) Inlet, PEX A (F1960) Outlet, PEX A (F1960) Relief Connection, 80 PSI.*

**LEAD FREE: The wetted surfaces of this product shall contain no more than 0.25% lead by weighted average. Complies with Federal Public Law 111-380. ANSI 3rd party approved and listed.*

This specification is provided for reference only. Apollo reserves the right to change any portion of this specification without notice and without incurring obligation to make such changes to Apollo products previously or subsequently sold. Most current information available at apollovalves.com.

aalberts integrated piping systems