SMITH-COOPER® INTERNATIONAL

# Series 0190301

## Quarter Turn Boiler Drain, MIP



- 125 lb. CWP
- NPT x 3/4" NHT
- Forged brass
- Butterfly handle
- Quarter turn operation
- ISO 9001:2008 manufacturer

**Note: Product contains brass which does not meet federal and state requirements for drinking water.**

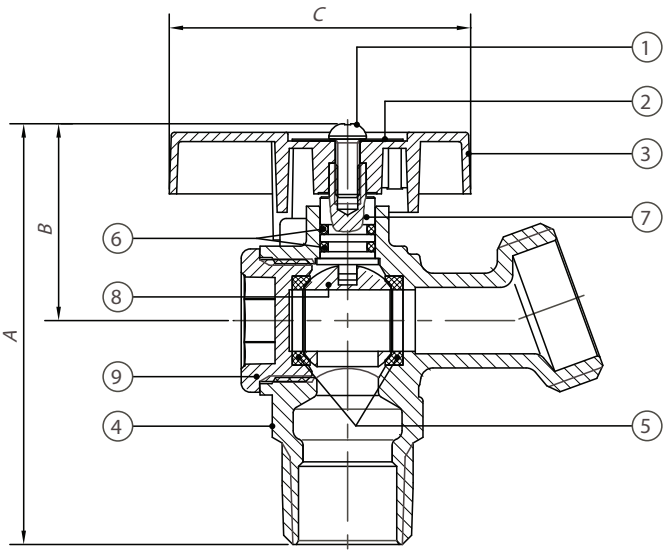


| No. | Part | Material |
|---|---|---|
| 1 | Wheel Nut | Hot Rolled SAE 1010R |
| 2 | Name Plate | Aluminium |
| 3 | Butterfly Handle | Zinc |
| 4 | Body | Brass B584 C85700 |
| 5 | Ball Packing | PTFE |
| 6 | O-Ring | NBR |
| 7 | Stem | Brass B16 C36000 |
| 8 | Ball | Brass B16 C36000 |
| 9 | Bonnet | Brass B584 C85700 |

| Size IN | Part Number | Weight LB | A IN | B IN | C IN |
|---|---|---|---|---|---|
| 1/2 | 0190301G | 0.5 | 2.70 | 1.26 | 1.93 |
| 3/4 | 0190301I | 0.6 | 2.70 | 1.26 | 1.93 |


USA 800-766-0076
Fax 323-890-4456
www.smithcooper.com
Los Angeles, CA
Chicago, IL
Atlanta, GA
Vancouver, WA
Houston, TX


REV 8-16