SMITH-COOPER® INTERNATIONAL

USA 800-766-0076
Fax 323-890-4456
www.smithcooper.com
Los Angeles, CA
Chicago, IL
Atlanta, GA
Vancouver, WA
Houston, TX

Series 0209CV40

PVC In-Line Check Valve, FIP x FIP



- 150 psi @ 73˚F
- Schedule 40 PVC
- Female threaded ends
- EPDM seal
- Spring loaded, stainless
- Check opens at 2 psi

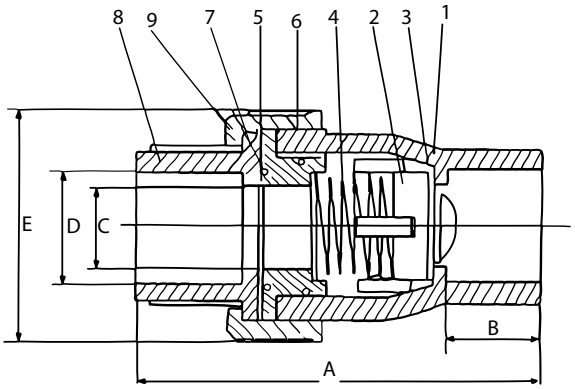

No.	Part	Material
1	Body	PVC
2	Gate	PVC
3	Valve Seat	EPDM
4	Spring	SU316
5	Thread Spacer	PVC
6	Spacer Seal	EPDM
7	End Seal	EPDM
8	Union Connector	PVC
9	Union Nut	PVC

Size IN	Part Number	Weight LB	A IN	B IN	C IN	D IN	E IN
1/2	0209CV40G	0.43	3.70	0.69	0.59	0.84	2.13
3/4	0209CV40I	0.58	4.14	0.99	0.79	1.05	2.44
1	0209CV40K	0.81	4.74	1.18	0.95	1.32	2.75
1-1/4	0209CV40L	1.27	5.37	1.18	1.18	1.66	3.26
1-1/2	0209CV40M	1.47	5.89	1.36	1.34	1.90	3.70
1	0209CV40N	2.53	7.03	1.73	1.77	2.38	4.51

SMITH-COOPER® INTERNATIONAL

Series 0209CV50

PVC In-Line Check Valve, Slip x Slip



- 150 psi @ 73˚F
- Schedule 40 PVC
- EPDM seal
- IPS socket
- Spring loaded, stainless
- Check opens at 2 psi

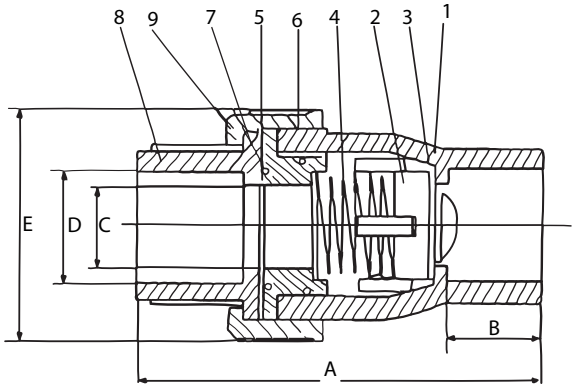

No.	Part	Material
1	Body	PVC
2	Gate	PVC
3	Valve Seat	EPDM
4	Spring	SU316
5	Thread Spacer	PVC
6	Spacer Seal	EPDM
7	End Seal	EPDM
8	Union Connector	PVC
9	Union Nut	PVC

Size IN	Part Number	Weight LB	A IN	B IN	C IN	D IN	E IN
1/2	0209CV50G	0.43	3.70	0.69	0.59	0.84	2.13
3/4	0209CV50I	0.58	4.14	0.99	0.79	1.05	2.44
1	0209CV50K	0.81	4.74	1.18	0.95	1.32	2.75
1-1/4	0209CV50L	1.27	5.37	1.18	1.18	1.66	3.26
1-1/2	0209CV50M	1.47	5.89	1.36	1.34	1.90	3.70
1	0209CV50N	2.53	7.03	1.73	1.77	2.38	4.51

USA 800-766-0076
Fax 323-890-4456
www.smithcooper.com
Los Angeles, CA
Chicago, IL
Atlanta, GA
Vancouver, WA
Houston, TX