SMITH-COOPER® INTERNATIONAL

Series 0190120L

Lead-Free Washing Machine Valve, FIP



- California AB1953 lead-free approved
- Meets federal Safe Water Drinking Water Act, lead-free requirement
- Cast brass
- Chrome plated
- 3/4" hose thread outlet
- Pipe threads comply with ANSI B1.20.1
- Hose threads comply with ANSI B1.20.7

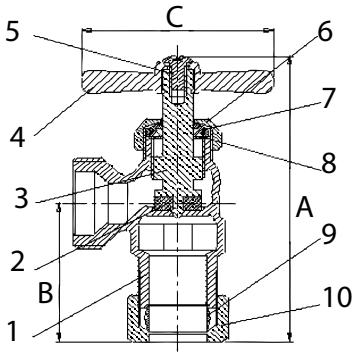

No.	Part	Material
1	Body	C.P. Cast Brass ASTM B-584, C89550
2	Bibb Washer	Rubber (NBR)
3	Stem	C.P. Cast Brass ASTM B-584, C89550
4	Handle	C.P. Zinc
5	Screw	C.P. Brass ASTM B-134, C27000
6	Packing Nut	C.P. Brass ASTM B-124, C37000
7	Packing Washer	Rubber (NBR)
8	S.S. Washer	Stainless Steel 304
9	Brass Ring	Brass ASTM B-124, C37700
10	Coupling Nut	C.P. Brass ASTM B-124, C37700

Size IN	Part Number	Weight LB	A IN	B IN
1/2	0190167IIL	0.20	1.31	1.36

USA 800-766-0076
Fax 323-890-4456
www.smithcooper.com
Los Angeles, CA
Chicago, IL
Atlanta, GA
Vancouver, WA
Houston, TX

SMITH-COOPER® INTERNATIONAL

USA 800-766-0076
Fax 323-890-4456
www.smithcooper.com
Los Angeles, CA
Chicago, IL
Atlanta, GA
Vancouver, WA
Houston, TX

Series 0190125L

Lead-Free Washing Machine Valve, Compression



- California AB1953 lead-free approved
- Meets federal Safe Water Drinking Water Act, lead-free requirement
- Cast brass
- Chrome plated
- 3/4" hose thread outlet
- Pipe threads comply with ANSI B1.20.1
- Hose threads comply with ANSI B1.20.7

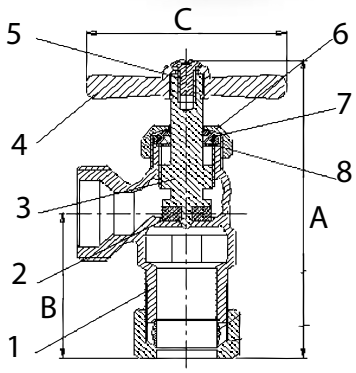

No.	Part	Material
1	Body	C.P. Cast Brass ASTM B-584, C89550
2	Bibb Washer	Rubber (NBR)
3	Stem	C.P. Cast Brass ASTM B-584, C89550
4	Handle	C.P. Zinc
5	Screw	C.P. Brass ASTM B-134, C27000
6	Packing Nut	C.P. Brass ASTM B-124, C37000
7	Packing Washer	Rubber (NBR)
8	S.S. Washer	Stainless Steel 304

Size IN	Part Number	Weight LB	A IN	B IN	C IN
1/2	0190125GL	0.37	3.50	1.56	2.09