SMITH-COOPER® INTERNATIONAL

USA 800-766-0076
Fax 323-890-4456
www.smithcooper.com
Los Angeles, CA
Chicago, IL
Atlanta, GA
Vancouver, WA
Houston, TX

Series 0190102

Brass Boiler Drain, FIP



- 125 lb. CWP
- NPT x 3/4" NHT
- Cast brass
- CSA approved
- Certified to NSF/ANSI 61-8
- ISO 9001:2008 manufacturer

Note: Product contains brass which does not meet federal and state requirements for drinking water.

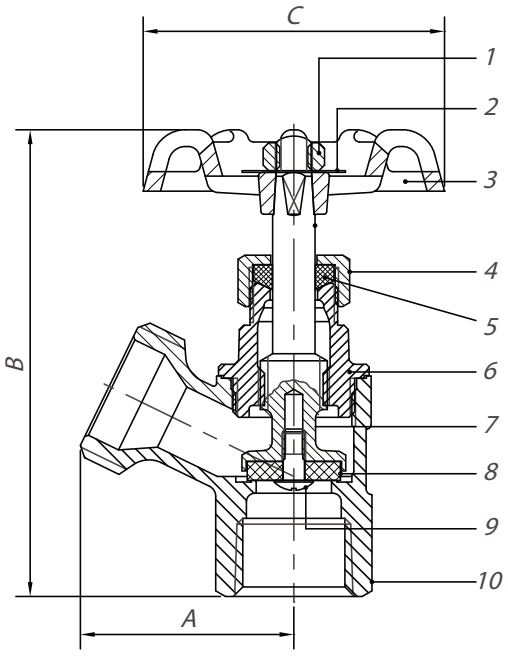

No.	Part	Material
1	Wheel Nut	Hot Rolled SAE 1010R
2	Name Plate	Aluminium
3	Hand-Wheel	Cast Iron
4	Packing Nut	Brass B16 C36000
5	Gland Packing	Teflon Polyflon
6	Bonnet	Brass B584 C85700
7	Stem	Brass B584 C85700
8	Seat Packing	NBR
9	Seat Screw	Brass B-124, C37700
10	Body	Brass B584 C85700

Size IN	Part Number	Weight LB	A IN	B IN	C IN
1/2	0190102G	0.5	1.46	3.35	2.09
3/4	0190102I	0.5	1.46	3.35	2.09

SMITH-COOPER® INTERNATIONAL

USA 800-766-0076
Fax 323-890-4456
www.smithcooper.com
Los Angeles, CA
Chicago, IL
Atlanta, GA
Vancouver, WA
Houston, TX

Series 0190103

Brass Boiler Drain, MIP



- 125 lb. CWP
- NPT x 3/4" NHT
- Cast brass
- CSA approved
- Certified to NSF/ANSI 61-8
- ISO 9001:2008 manufacturer

Note: Product contains brass which does not meet federal and state requirements for drinking water.

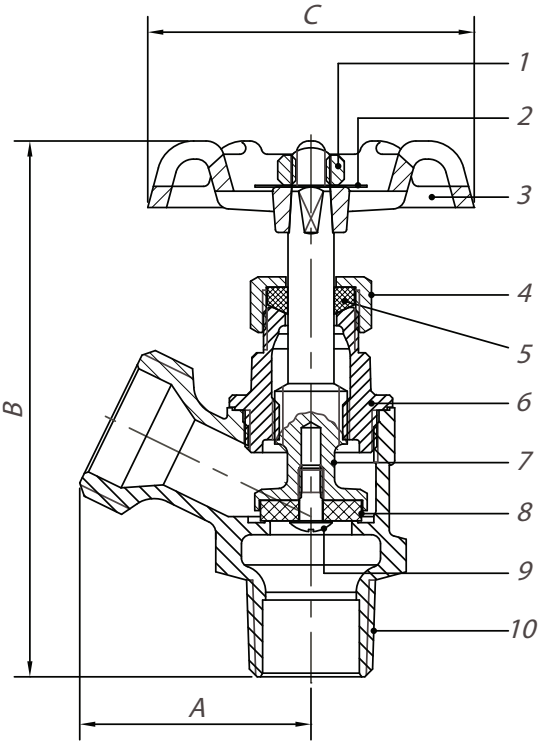

No.	Part	Material
1	Wheel Nut	Hot Rolled SAE 1010R
2	Name Plate	Aluminium
3	Hand-Wheel	Cast Iron
4	Packing Nut	Brass B16 C36000
5	Gland Packing	Teflon Polyflon
6	Bonnet	Brass B584 C85700
7	Stem	Brass B584 C85700
8	Seat Packing	NBR
9	Seat Screw	Brass B-124, C37700
10	Body	Brass B584 C85700

Size IN	Part Number	Weight LB	A IN	B IN	C IN
1/2	0190103G	0.5	1.46	3.51	2.09
3/4	0190103I	0.5	1.46	3.39	2.09