VRH-JD-10/15

JOHN DEERE GREENSTAR™ 2/3
PLANTER CONTROL INTERFACE KIT

INSTALLATION MANUAL

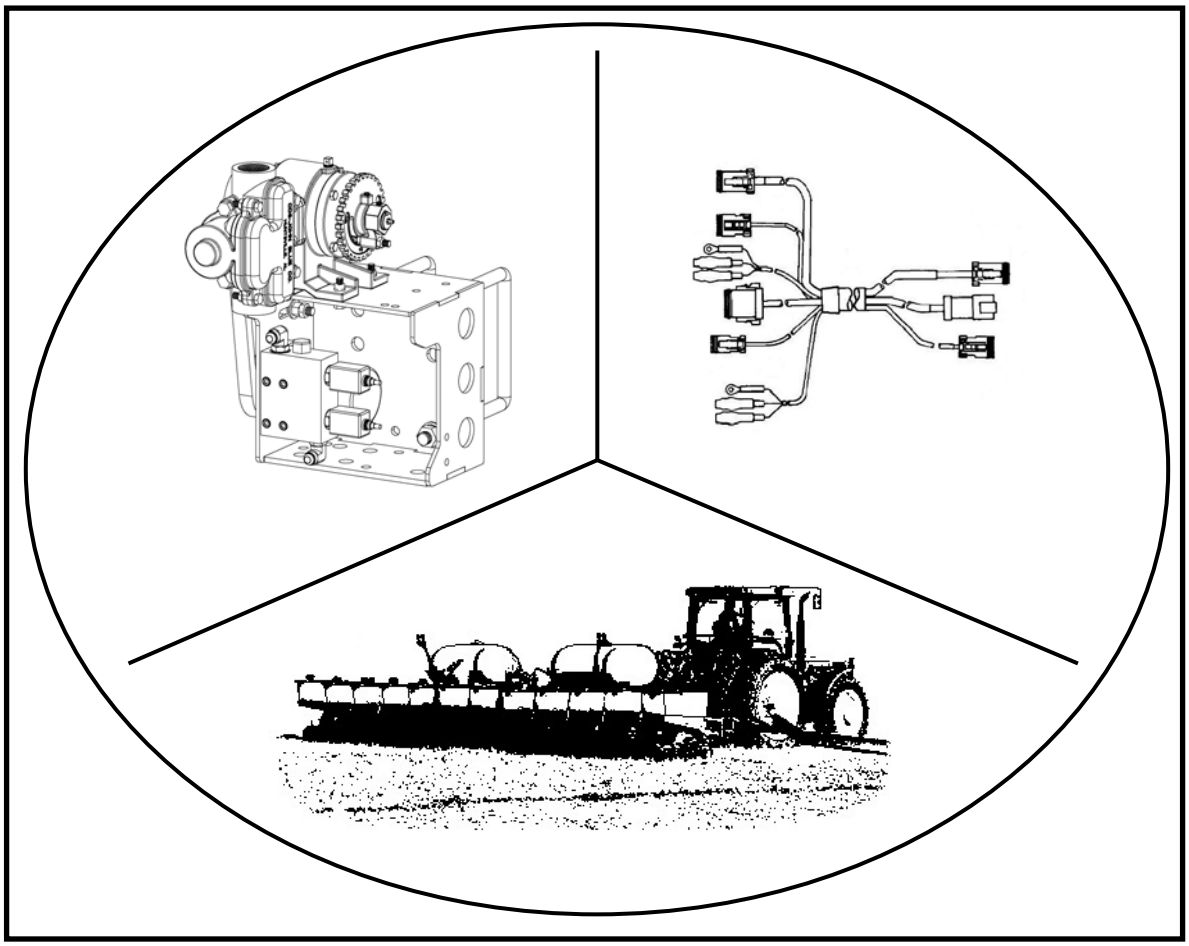

CDS-JOHN BLUE COMPANY

DIVISION OF ADVANCED SYSTEMS TECHNOLOGY, INC.

290 Pinehurst Drive - Huntsville, Alabama 35806

P.O. Box 1607 - Huntsville, Alabama 35807

Telephone: (256) 721-9090 - FAX: (256) 721-9091 - Toll Free: 1-800-253-2583

Printed in U.S.A. 12-M-52 Rev 7/13

TABLE OF CONTENTS

Safety Precautions …… 2
Introduction …… 3
Hydraulic System …… 3
Required Components …… 4
System Plumbing …… 5
Harness Connections …… 6
Control Configuration …… 8
Troubleshooting …… 11
Warranty …… 12

SAFETY PRECAUTIONS

- Equipment should be operated only by responsible people.
- A careful operator is the best insurance against an accident.
- Fill system with WATER first and check output.
- Check all valves, fittings, hose clamps, etc. for wear / leaks before admitting process fluid to the system.
- Replace hoses when worn, cracked, or if leaking.

WARNING: USE OF THIS PRODUCT FOR ANY PURPOSES OTHER THAN ITS ORIGINAL INTENT, ABUSE OF THE PRODUCT, AND/OR MODIFICATION TO THE ORIGINAL PRODUCT IS STRICTLY PROHIBITED BY CDS-JOHN BLUE COMPANY. CDS-JOHN BLUE COMPANY RESERVES THE RIGHT TO DENY WARRANTY OR LIABILITY CLAIMS IN ANY/ALL SITUATIONS INVOLVING MISUSE, ABUSE OR MODIFICATION.

THE ORIGINAL INTENT OF THIS PRODUCT DOES NOT INCLUDE USE WHERE THE MAXIMUM ALLOWED SPEED, PRESSURE, OR TEMPERATURE IS EXCEEDED, AND IT DOES NOT INCLUDE APPLICATIONS UTILIZING FLUIDS THAT ARE NOT COMPATIBLE WITH THE PRODUCT'S COMPONENT MATERIALS. DO NOT USE THIS PRODUCT WITH FLAMMABLE OR COMBUSTIBLE FLUIDS SUCH AS GASOLINE, KEROSENE, DIESEL, ETC…, AND DO NOT USE IN EXPLOSIVE ATMOSPHERES. FAILURE TO FOLLOW THIS NOTICE MAY RESULT IN SERIOUS INJURY AND/OR PROPERTY DAMAGE AND WILL VOID THE PRODUCT WARRANTY. IF IN DOUBT ABOUT YOUR APPLICATION, CONTACT YOUR STOCKING DEALER OR THE CDS-JOHN BLUE TECHNICAL STAFF AT 1-800-253-2583.

To The Owner

This manual has been prepared and illustrated to assist you in the maintenance of your CDS – JOHN BLUE drive. Enter your serial number and the date of the purchase in the space provided below for future reference in service information or for ordering parts. Because our engineering department is constantly improving products, we reserve the right to make design and specification changes without notice.

Model Number: _____ Serial Number: _____ Purchase Date: _____

**** Note: Greenstar™ name and logo(s) are property of Deere & Company, Moline IL.**

© 2013 CDS-John Blue Co.

INTRODUCTION

Kit Description:

The John Deere GS2/3 control interface kit provides the necessary custom components for, and instructions on how to install, a CDS-John Blue Variable Rate Hydraulic Drive onto an existing John Deere CANbus Planter using the Greenstar™ display/control system. There are two versions of this kit: a single section kit (#VRH-JD-10) and a multi-section kit (#VRH-JD-15).

Some "off of the shelf" components (that the user may already have) will still need to be obtained to complete the installation, and they are listed on the next page. The components may be obtained from the supplier listed, or an equal to them may be found.

Installations on other CANbus wired equipment may be possible, but there may be extra parts and tasks required beyond what is detailed in this manual in order to complete the system.

System Components:

Other CDS-John blue components that are recommended for use with this kit are:

- **Exacto-Flow** flow dividers, available 6, 12, and 20 port models and available with adjustable spring tension for section balancing (FD-0610, FD-1210, & FD-2010)
- **Visagage II** FD-type flow monitors, available in sets of four or as single columns (SMFD1 or SMFD4)
- **Serviceable Check Valves**, available with or without fittings (CV-1101, 1.0 psi)

INSTALLATION

Hydraulic System:

To reach full pump rpm, the hydraulic system must supply at least 9.5 gpm to the manifold inlet port, and be capable of developing at least 1600 psi. The maximum gpm and pressure should not exceed 10 gpm and 2750 psi.

Adjust your maximum **PTO flow output** to **10 gpm,** or use an in-line bypass valve if required. 10 gpm should not be exceeded to keep from spinning the pump above its maximum rpm. A flow rate lower than 9.5 gpm may be used, as long as the user understands that that the piston pump cannot generate its advertised maximum rpm and flow.

As supplied, the system is compatible with a closed center load sensing hydraulic system, which compensates for flow and pressure. If you have a closed center pressure compensating system, you may have to put an-inline orifice (approx. 0.125" diameter) before the inlet port of the manifold to make the variable stroke pump build pressure. Both of the systems above have a flow control valve to limit flow.

An open center hydraulic system will require the use of a flow bypass valve if the flow is too high, since this system uses a constant flow pump. Note that care must be taken to avoid overheating the oil when bypassing a large volume of it for long periods of time.

A dedicated hydraulic circuit for the pump drive is ideal, but if no more connections are available you may connect (one drive max.) to the circuit feeding the CCS fan on Deere planters.

© 2013 CDS-John Blue Co.

Required Components:

The following list details the key components, in addition to the Variable Rate Hydraulic that are necessary to use the drive with an existing John Deere Greenstar™ display/control system:

Included with CDS-John Blue VRH-JD-10 Single Section Kit:

Item	Qty	Description	Mfg. & Part Number
A	1	Standard single section harness kit - PWM	CDS-John Blue #116046-01

Included with CDS-John Blue VRH-JD-15 Multi-Section Kit:

Item	Qty	Description	Mfg. & Part Number
B	1	Multi-section (2 to 7 sections) harness kit	CDS-John Blue #116080-01
C	1	PWM valve adapter harness	CDS-John Blue #116085-01

Required items that must be purchased separately:

Item	Qty	Description	Mfg. & Part Number (*or use equal)*
D	1	Flow meter	Microtrak FM270 #01515 Raven RFM60P (requires modification of the harness – see page 10)
E	1	Strainer – 50 Mesh	Banjo #MLST150-50
F	1	Standard flow divider	CDS-John Blue #FDxx10 (6, 12, and 20 port models available)
G	#	Visagage II monitors (qty depends on # of rows)	CDS-John Blue #SMFDx (single and sets of 4 available)
H	#	1.0 psi check valve (qty depends on # of rows)	CDS-John Blue #CV-1101-xxx
I	1	Rate controller kit (controller, harness, and foot switch)	CDS-John Blue #116086-01
J	1	Button implement switch or Whisker implement switch	CDS-John Blue #116087-01 CDS-John Blue #116088-01
K	1	Implement switch 7ft extension cable	CDS-John Blue #116079-01
L	1	Parallel arm height switch bracket	CDS-John Blue #116089-01

Optional items for sectional control (to be purchased separately):

Item	Qty	Description	Mfg. & Part Number (*or use equal)*
M	1	Relief valve – 100 psi setting	Banjo #MVRP100-100
N	#	3-way control valve (qty depends on # of sections)	Banjo #MEV200SLCF
O	#	Adjustable flow divider (qty depends on # of sections)	CDS-John Blue #FDxx10-ADJ
P	#	Visagage II monitors (qty depends on # of rows)	CDS-John Blue #SMFDx
Q	#	1.0 psi check valve (qty depends on # of rows)	CDS-John Blue #CV-1101-xxx

Optional parts for special applications:

- Older non CAN-bus machines will require a CAN backbone harness (John Deere #PF81131)
- 2008 and older machines will require a CAN front ext. harness (CDS-John Blue #116090-01)
- 2010 and older tractors will require a constant power harness (CDS-John Blue #116091-01) for the foot switch
- On split row machines, an extended lift arm bracket is required (Deere #A85358)

© 2013 CDS-John Blue Co.

Fertilizer System Plumbing:

The following diagram shows a typical single section variable rate setup using a hydraulically driven CDS – John Blue piston pump, using a single flow divider.

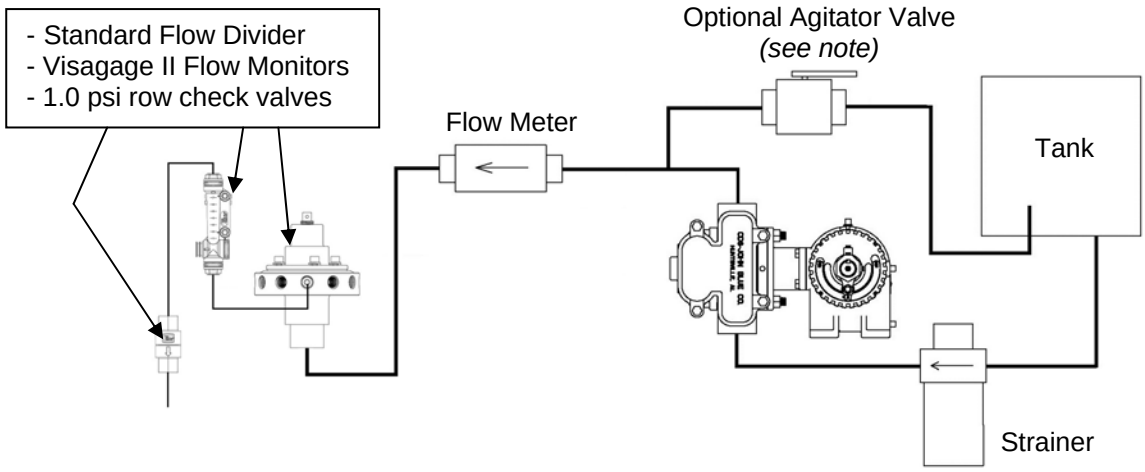

The following diagram shows a multi-section system, using multiple adjustable flow dividers:

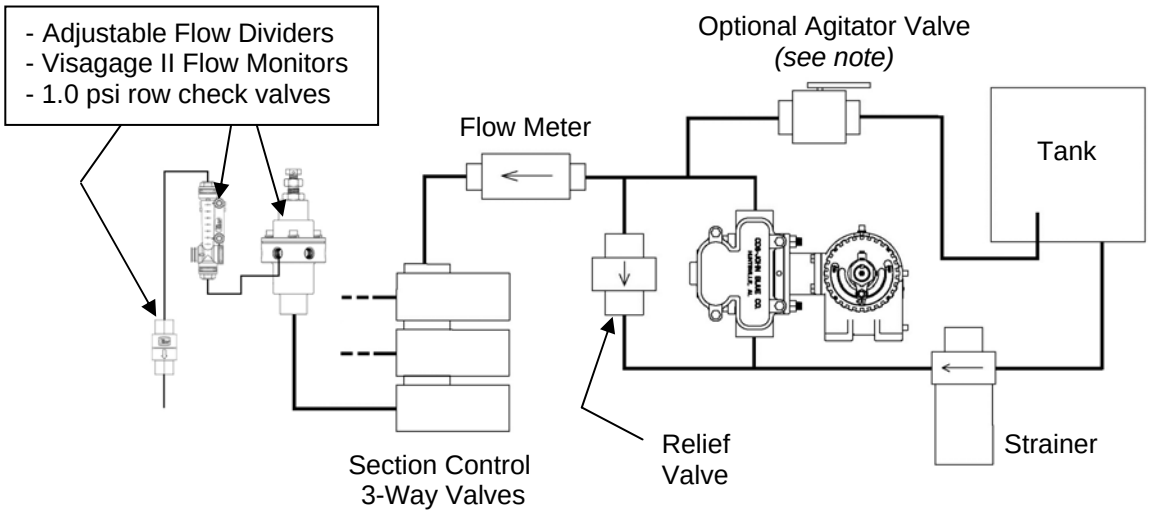

Notes:

- When using a tank agitator circuit, the amount bled off to the tank will reduce the max flow capability of the pump by the same amount.
- Section control will require the purchase of optional wiring harnesses and the correct number of 3-way valves, adjustable flow dividers, etc... to complete the system.
- The adjustable flow dividers will need to be calibrated at installation by using flow meters or a visual flow monitor system to compare each section's output flow. This is to be completed at system setup – reference the instructions supplied with the flow divider.
- It is recommended that the lines going to each row out of the flow divider be equal in length, and all coiled-up extra line be laid flat.

© 2013 CDS-John Blue Co.

Harness Connections:

The following figures and instructions detail the necessary connections for these harnesses. Be sure to read the special notes at the bottom of page 4 which give details about extra harnesses that older planters/tractors will need.

A. Mount the rate controller in a protected location on the planter (under stairs is common).

B. Connect the rate controller harness (supplied with rate controller) as shown below:

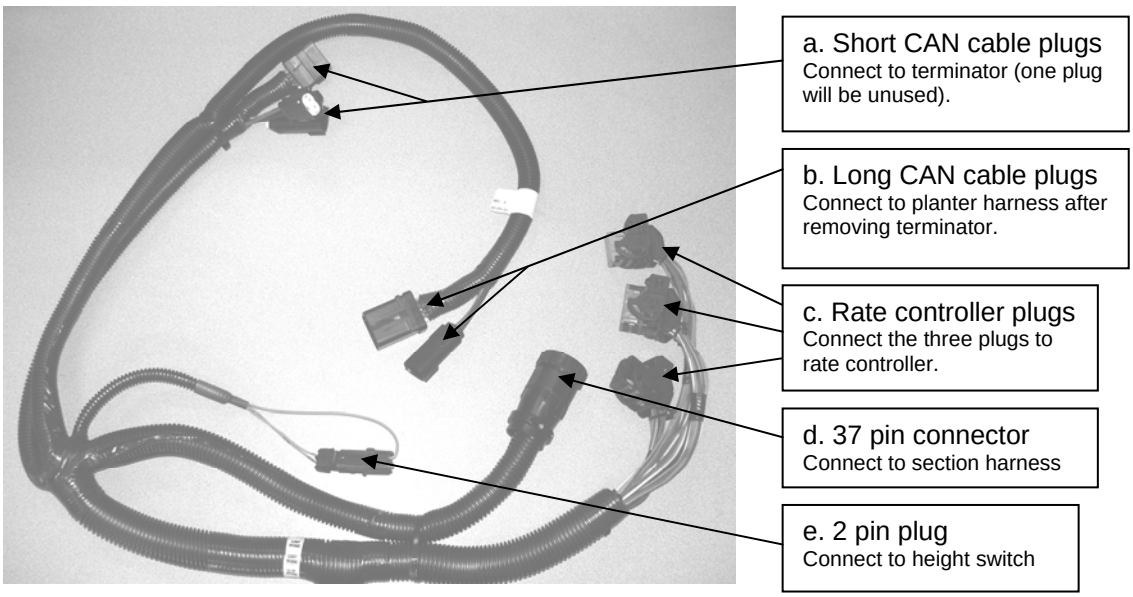

C. Install the foot switch (supplied with rate controller) in the cab by connecting it to the constant power harness. See the special notes at the bottom of page 4 about this harness.

D. Section control harness

1) VRH-JD-10 Single section harness (116046-01) connections:

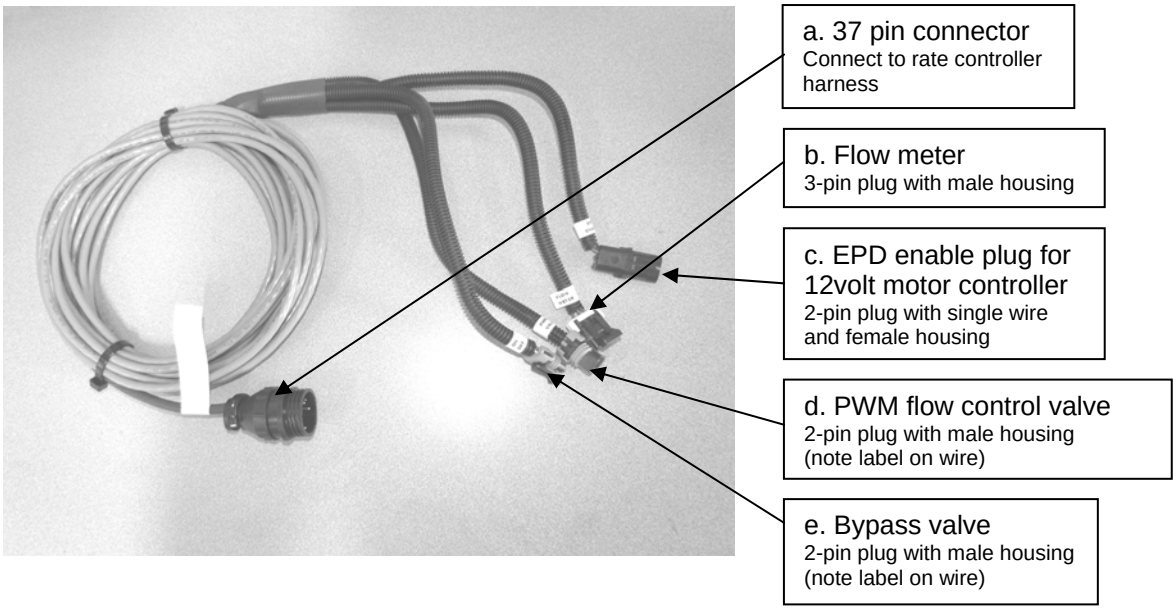

© 2013 CDS-John Blue Co.

2) VRH-JD-15 Multi-section harness (116080-01) and PWM adapter harness (116085-01) connections:

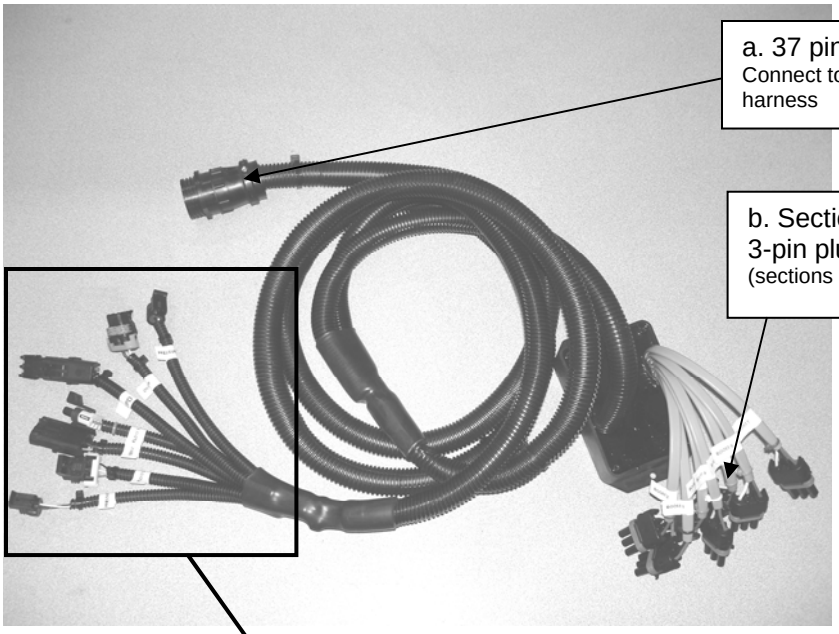

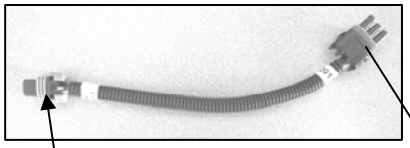

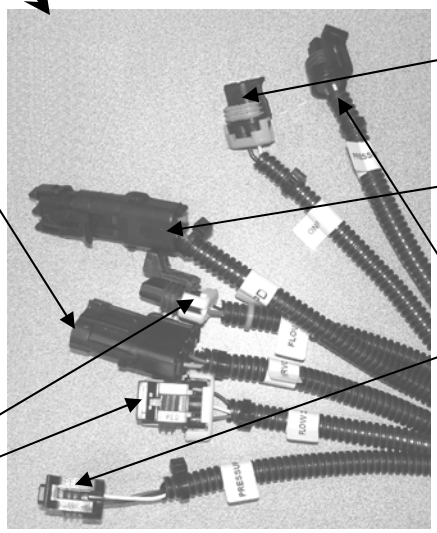

c. Bypass (on/off) valve
2-pin plug with male housing

f. EPD enable plug for 12volt motor controller
2-pin plug with single wire

i. PWM flow control valve
2-pin plug on 116085-01 adapter harness with male housing

Connect other end to 116080-01 harness as shown

g. & h. Pressure 1 & 2
2-pin plugs with male housings, use when equipped

d.& e. Flow meter 1 & 2
3-pin plugs with male housing
(Flow #2 not currently used)

Notes:

- Only one flow meter input can be used at this time with the Greenstar™ system
- Pressure sensors may be used with the Greenstar™ system, use a Raven #422-0000-090 or equivalent sensor
- The flow control valve is the lower valve in the manifold, near the inlet port:

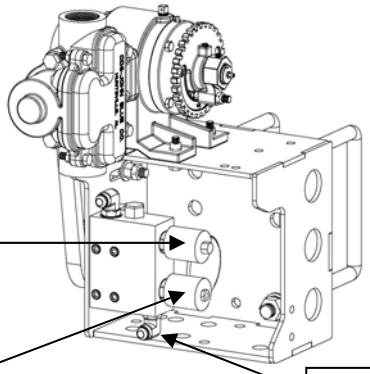

© 2013 CDS-John Blue Co.

Control Configuration:

The Greenstar™ control needs to be configured to work with the valves and flow meter in this system. The following instructions detail the necessary inputs:

A.

Select the GS2 Rate Controller icon from the main menu

B.
Select the Setup button (arrow icon) to display the setup menu tabs

1 Select the Implement tab
   - Select the implement type, and add a name and size to help identify the setup later when navigating the menus
   - Enter your implement section and swath width information
   - The height switch drop down box is normally set to "Do not share" *(see special notes)*

2 Select the System tab

PWM flow control valve setup instructions:

- Enter the information as follows:

Section Valve type	=	3-wire (for Banjo, Raven, & Teejet valves)
Control Valve type	=	PWM
Tank Capacity	=	Enter your value, default is 1000 gal.
Flow Return box	=	NOT checked
Constant Flow box	=	NOT checked
Flowmeter Calib.	=	72 (for Microtrak FM270)
Flowmeter Units	=	gal (for Microtrak, "10 gal" for some Raven)
Agitator Valve box	=	NOT checked (unless equipped)
Pressure Sensor box	=	NOT checked (unless equipped)

- Press the "PWM Setup" button and enter the following:

Control Valve Calibration	=	6533
Coil Frequency	=	300
High Limit	=	255
Low Limit	=	57
Pump Enable Checkbox	=	CHECKED
Enable Pump	=	CHECKED

3 Select the Alarms tab
   - Setup as necessary for your system

© 2013 CDS-John Blue Co.

4 Select the Rates tab

- Input your desired rates
- Set the Minimum flow rate to 1.0 gpm
- Set Rate smoothing to an initial setting of 6. *The allowed range is 3 to 15, and you will have to adjust based on your machine and field conditions.*

5

Go back to the GS2 Rate Controller screen and set the rate box pull-down box to your desired setting

C.
Select the Diagnostics Button (wrench icon) to display the diag. menu tabs

1 Select the Readings tab, and use the drop-down menu to verify the following:

- Hardware/Software – verify the software version is 3.00 or greater. *If it is not, you must update the software through John Deere.*
- System Voltages – verify proper operation of components
- Delivery System - recommended to blow air through flowmeter to verify
- Section (valve) Status – verify all valves are listed
- Sensors/Status – if installed, verify pressure sensor readings
- Switches/Status – cycle implement height switch to verify operation

2 Select the Tests tab, and use the drop-down menu to verify the following:

- Control Valve Test – cycle the valve between open and close 4 times to verify operation
- Section (valve) Test – perform test as instructed on screen
- Flowmeter Calibration – perform test as instructed on screen
- Pressure Sensor Calibration – perform test as instructed on screen

© 2013 CDS-John Blue Co.

Special Notes:

A.) There is a **limp-home** mode that can be used if a communication failure between the GS2 display and rate controller occurs. An in-line 10 amp fuse is located in the main PF90553 main extension harness that connects to the planter harness. The limp-home mode reverts back to rate 1, and assumes that the tractor is travelling at 5 mph.

B.) Tank refilling: if there is no tank level sensor installed, you will manually have to "refill" the tank on the main GS2 rate controller screen each time it is filled.

C.) The "Manual" button on the Main GS2 rate controller screen will run the pump for 8 seconds to help prime the system.

D.) If using a Raven flow meter, a RFM60P or RFM100P meter may be used (they are compatible with 12V dc) but the harness will need to be modified or an adapter harness used. The pinouts for the Microtrak flowmeter plug are as follows:

Pin A = Signal	(green or brown wire)
Pin B = 12V +	(red wire)
Pin C = Ground	(blue wire)

The plug itself is a 3 pin Metri-Pack 150 tower.

Important note: some Raven flowmeter's calibration numbers are per **10 gallons** instead of per **1 gallon**, so adjust the calibration number accordingly for your control.

© 2013 CDS-John Blue Co.

TROUBLE SHOOTING

ISSUE	POSSIBLE CAUSES
Pump/motor runs uncontrollably	Hydraulic flow is **backwards** entering the manifold "Outlet" port instead of the "Inlet" port. Check that rotation of the pump and/or motor is CLOCKWISE from the motor shaft (sprocket) end - reverse hydraulic flow if needed.
	Hydraulic flow is too high – adjust tractor's maximum flow to be 10 GPM.
	PWM and ON/OFF valves are installed in wrong ports – valve with longer coil retaining nut is the ON/OFF valve (also has "SV" stamped on the stem hex body)
Pump/motor will not start	Ensure "Pump Enable" checkboxes are set correctly in the "PWM Setup" screen. Also check High and Low Limit settings.
	Ensure the cable plugs labeled "PWM" and "ON/OFF" are attached to the correct valves. The PWM valve is closest to the INLET port.
	An orifice is needed in INLET port of manifold if using a **closed-center pressure compensating** hydraulic system. Orifice size should be approx. 0.125"
	Test to see if coil is getting power. Coil will be magnetic when powered on (may hold steel object close to it to test).
Pump/motor will not stop when implement is lifted	Test resistance of implement switch contacts to make sure no current can pass when they are supposed to be "open".

© 2013 CDS-John Blue Co.

LIMITED WARRANTY

THIS WARRANTY IS IN LIEU OF ALL OTHER WRITTEN OR EXPRESS WARRANTIES AND REPRESENTATIONS. ANY IMPLIED WARRANTIES INCLUDING MERCHANTABILITY OR FITNESS FOR ANY PARTICULAR PURPOSE ARE EXPRESSLY LIMITED TO THIS WRITTEN WARRANTY. CDS-JOHN BLUE COMPANY SHALL NOT BE LIABLE FOR CONSEQUENTIAL DAMAGES.

Use of this product for any purpose other than its original intent, abuse of the product, and/or any modification to the original product is strictly prohibited by the manufacturer, CDS-John Blue Company. Any modification to the product should be approved by CDS-John Blue Company prior to use. CDS-John Blue Company will deny Warranty claims and liability in any situation involving misuse, abuse or modification.

Each new machine or component manufactured by CDS-John Blue Company through original buyer is warranted by CDS-John Blue Company to buyer and to any party or parties to whom buyer may resell, lease or lend the equipment to be free from defects in material and workmanship under normal use and service. This obligation of CDS-John Blue Company under this warranty is limited to the repair or replacement of defective parts or correction of improper workmanship of any parts of such equipment which shall within one year from the date of CDS-John Blue's original delivery thereof, be returned to CDS-John Blue's factory, transportation charges prepaid and which CDS-John Blue Company shall determine to its satisfaction upon examination thereof to have been thus defective. When it is impractical to return the defective parts of such equipment to CDS-John Blue's factory, then CDS-John Blue shall have no liability for the labor cost involved in repairing or replacing any such parts and shall be liable solely for supplying the material necessary to replace or repair the defective parts, provided that prior thereto CDS-John Blue Company shall have determined to its satisfaction that any such parts are thus defective.

This warranty shall not apply to any equipment which shall have been repaired or altered outside CDS-John Blue's factory in any way so as to affect its durability, nor which has been subjected to misuse, abuse, negligence or accident, or operated in any manner other than in accordance with operating instructions provided by CDS-John Blue Company. This warranty does not extend to repairs made necessary by the use of inferior or unsuitable parts or accessories, or parts or accessories not recommended by CDS-John Blue Company.

CDS-John Blue Company makes no warranties in respect to parts, accessories or components not manufactured by CDS-John Blue Company, same ordinarily being warranted separately by their respective manufacturers.

DIVISION OF ADVANCED SYSTEM TECHNOLOGIES HUNTSVILLE AL (256) 721-9090

CDS-John Blue Company

Division of Advanced Systems Technology

290 Pinehurst Dr. Huntsville AL 35806

PO Box 1607 Huntsville AL 35807

Telephone: (256) 721-9090 - Fax (256)-721-9091 - Toll Free 1-800-253-2583

www.cds-johnblue.com

YOUR LOCAL DEALER

© 2013 CDS-John Blue Co.