DP-185.1
DIAPHRAGM PUMP

Parts & Instruction Manual

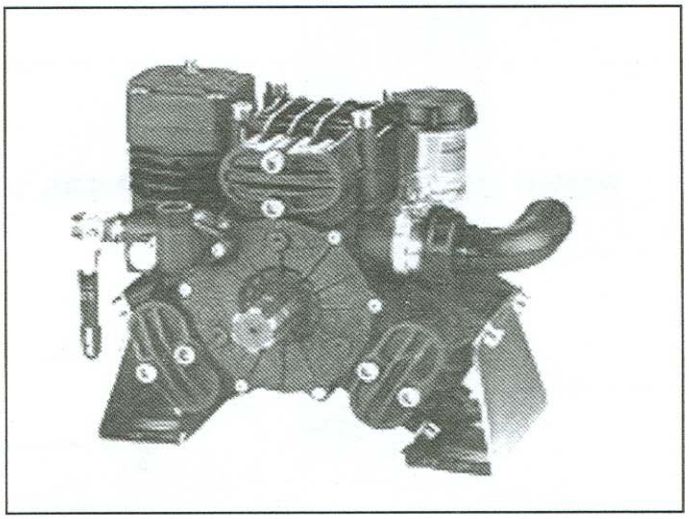

CDS-JOHN BLUE COMPANY

DIVISION OF ADVANCED SYSTEMS TECHNOLOGY, INC.

290 Pinehurst Drive, Huntsville, Alabama 35806
P.O. Box 1607, Huntsville, Alabama 35807
Telephone: (256) 721-9090 • FAX: (256) 721-9091
Toll Free: 1-800-253-2583

Table of Contents

NOTES TO THE OWNER 3

SELECTION OF PUMP AND EQUIPMENT DESIGN 3

SAFETY PRECAUTIONS 3-4

INSTALLATION SCHEME 5

ORDINARY MAINTENANCE FOR DIAPHRAGM PUMPS 6-7

ORIGINAL SPARE PARTS 8

PRESSURE REGULATOR OPERATING INSTRUCTIONS 9

CHEMICAL RESISTANCE CHART 9

PARTS LIST AND DRAWINGS 10-11

TROUBLES AND CURES REFERENCE CHART ..... BACK COVER

WARRANTY ..... BACK COVER

PUMP DIMENSIONS FOR DP-185.1

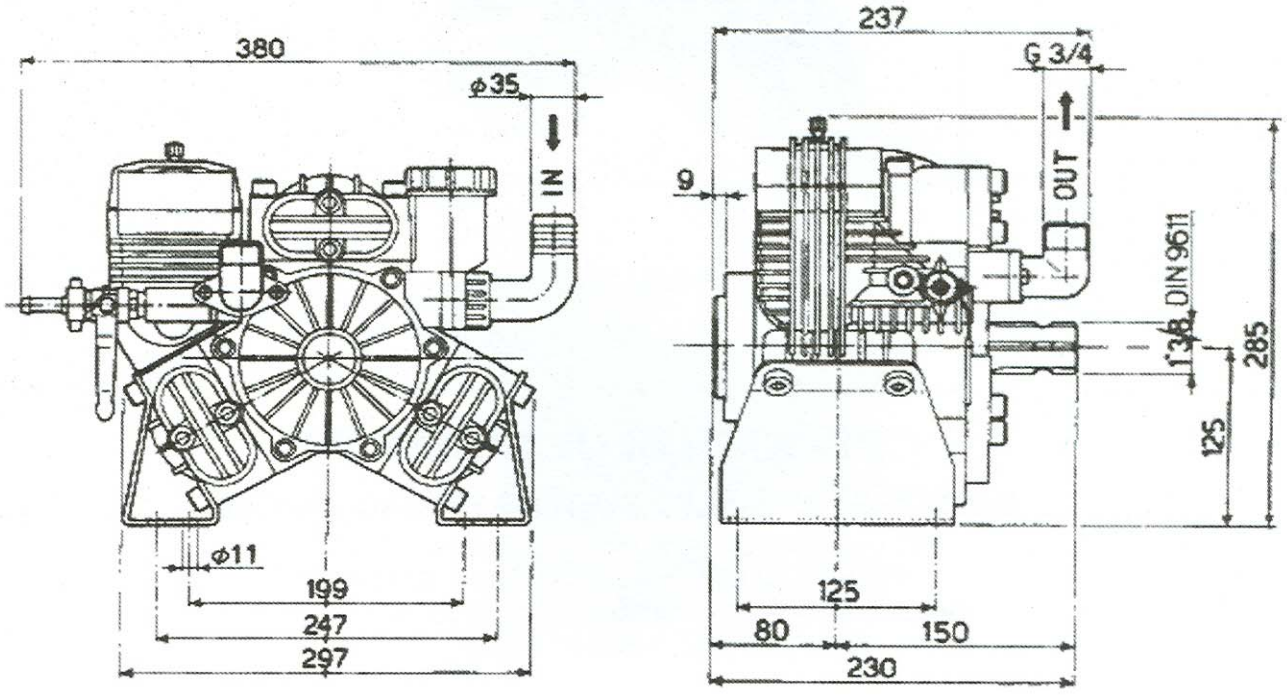

NOTES TO THE OWNER

Thank you for purchasing a CDS-John Blue diaphragm pump. These pumps are equipped with mechanical diaphragms. They are manufactured with materials that make them suitable for weed control, liquid fertilizer, spraying and washing. A complete system with accessories is easily adapted to tractors, sprayers and boom sprayers, electric motors and gasoline/diesel engines.

This manual has been prepared and illustrated to assist you in the mainenance of your CDS-John Blue Diaphragm Pump. Enter your serial number and date of purchase for the diaphram pump in the space provided below for ordering parts and service information.

Because our engineering department is constantly improving products, we reserve the right to make design and specification changes without notice.

Serial No. _____ **Purchase Date** _____

SELECTION OF PUMP AND EQUIPMENT DESIGN

With regard to safety, all pumps meet the regulations in effect at publishing time. Choose the pump type carefully, according to the kind of liquid used and to the technical specifications (output, pressure) needed. If there are any questions about which pump type should be used, please contact our Technical Department.

CDS-John Blue diaphragm pumps are designed and manufactured with materials that are compatible with water. They are also compatible with most pesticides and herbicides currently on the market in the concentration recommended by the manufacturer. Use only pump liquid that is compatible with the pump component materials. Failure to follow this warning can result in injury and/or property damage.

The technical specifications of each pump (RPM, output, pressure) are shown on the label attached to the pump. For more information, refer to our Technical Department at 1-800-253-2583.

Carefully evaluate which pump model series to use. Using the correct pump type and size for the operation system can prevent possible bodily injury. Also use similar care when selecting the electric, gasoline/diesel motors or driven systems so they conform to the recommended performance to prevent personal injury and environment damage. Finally, it is important to be cautious during the design and construction of the equipment to prevent bodily injury, coming not from the pump, but from the design, construction or improper use of equipment.

A certified electrician should be used when wiring an electrically driven pump.

SAFETY PRECAUTIONS

GENERAL

- Do not operate equipment until you read and understand Operators Manual.
- Carry a first aid kit and five (5) gallons of clean water to flush contaminated skin and eyes.
- Agricultural chemicals can be dangerous. Improper selection or application can injure persons, animals, plants, soils or other property. Follow label from chemical manufacturer.
- Always wear eye protection and protective clothing when in the area of spray pump and/or control.
- In addition to the pressure regulator, use the proper safety relief valve in the plumbing after the pump.
- Before each use, make certain that all connections are tight and secure.
- Disconnect power before servicing.
- Do not pump flammable or explosive fluids.

- Do not operate pump above recommended rpm.
- Provide adequate protection in guarding around the moving parts such as the shaft and the pulley.
- Stop pump and release all pressure within the system before servicing any component.
- Do not operate pump above 145°F (62°C) liquid temperature.
- Do not remove the pressure dampener until air pressure has been completely vented.

WARNING: Severe Bodily injury may occur if the above precautions are not taken.

OPERATIONAL

- Equipment should be operated only by trained, responsible people.
- Do not allow anyone but operator on equipment.
- Wear safety goggles and/or respirator when operating applicator.
- Do not attempt any service or disassembly without **stopping machine** and releasing all pressure from system.
- Do not operate equipment with shields removed.
- Make a visual inspection of all hose and fittings for soundness on a scheduled basis.
- Replace anything which appears questionable.

INSTALLATION

1. Pump should be installed perfectly lined up with the driven gears (pulleys, gear boxes, overgears, etc.).
2. Attach the pump to a strong base plate and anchor it with bolts sufficiently strong enough to hold it in place.
3. Proper selection of type and hose size is vital to good performance:
   - Diameter of suction, discharge and by-pass hoses should be at least that of the pump hose barb or greater.
   - Use only hoses rated for maximum pressure rating of the pump.
4. Use suction line of spiral steel wire braid reinforced suction hose to prevent collapse. Use good quality hose clamps and tighten securely.
5. Use only components (hose, fittings, clamps, etc.) rated for maximum pressure rating of the pump.
6. Failure to follow the above information can result in malfunctions of the pump and will void the product warranty.

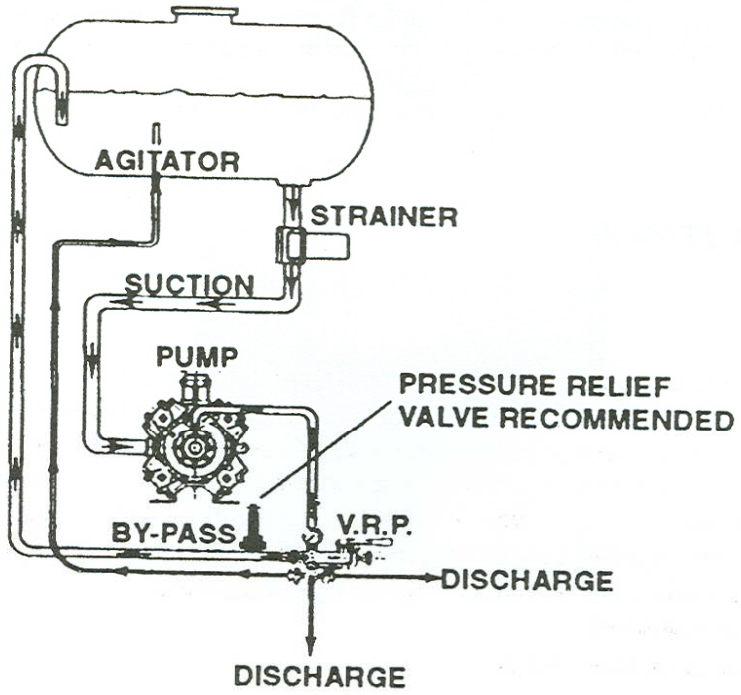

INSTALLATION SCHEME

CHECKS TO MAKE BEFORE USING THE PUMP

- With the pump not running, check to make sure that the oil level is correct. Add oil, if needed, taking care not to exceed the indicated level. Repeat with pump running. See "Oil Change" on page 7.





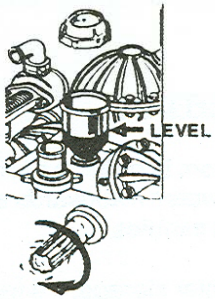

- Check to make sure the inlet and discharge hoses are not crimped. Also make sure the strainer is clean.
- Prevent any hose restrictions and be sure connections are tight to prevent air entering, since these conditions will compromise pump performance.
- If pumping from a tank, check to make sure that the control unit by-pass line is not too close to the inlet line. Make sure that it does not create turbulence inside the tank.
- Turn the pressure adjustment lever to the by-pass position when starting the pump.
- The pulsation dampener on the pump or on the pressure line is generally charged at 80-120 psi, the recommended pressure rating for the pump.
- For different working pressures, set the pressure of the pulsation dampener as follows:

WORKING PRESSURE	PULSATION DAMPENER PRESSURE
300 - 700 psi	80 - 120 psi
150 - 300 psi	70 - 80 psi
70 - 150 psi	15 - 70 psi

Note: As a general rule, set the pulsation dampener to 1/3 the working pressure without exceeding 100 psi. Also, with the pump not running, check the pressure with a pressure gauge. It is a good practice to inspect the pulsation dampener diaphragm at regular intervals.

SUCTION HEAD

Do not use pump for filling the tank. The hydroinjector, with a proper nozzle, can be used for this purpose. Avoid suction head higher than approximately 10 ft. and use the correct length for hoses, without elbow runs, better if pre-charged. In this case some problems may occur with the pump diaphragms.

OPERATING INSTRUCTIONS

- When starting pump, turn the valve lever to the dump position (by-pass) to facilitate priming. Once the pump is primed, turn the valve lever to the "PRESS" position and adjust the working pressure with the knob: turning knob clockwise will increase pressure, turning knob counterclockwise will decrease pressure.
- Operating pump above recommended rpm will not improve performance, but may damage the pump. Operation at rpm higher than specification voids all warranties.
- Be sure that the oil level is not above the maximum level with the pump running with pressure.

AFTER USE

After use, in order to prevent damage, flush the pump and let it operate for a few minutes at working pressure with clean water. Afterwards empty the pump, so that pressure drops to zero ("0"), then let the pump run without liquids for two minutes.

For winter storage, if a freezing condition will be encountered, empty the pump completely or flush pump with a mixture of water and antifreeze or RV antifreeze undiluted.

Periodically (at the end of a season) inspect the pump and the system components (hoses, connections and so on) and replace necessary parts.

ORDINARY MAINTENANCE FOR DIAPHRAGM PUMPS

Routine maintenance on the pump includes changing the diaphragms, oil, valve assembly and o-rings, all of which are normal wear parts.

VALVE ASSEMBLY AND O-RING REPLACEMENT

Occasionally, debris can cause the valves to not seat properly or damage o-rings. To check for this problem please follow these steps:

1. Remove the valve cover (or the manifold) and remove the valves, check for debris and wear. Also check o-rings.
2. Replace necessary parts and reassemble.
3. Repeat for all valves. Consult the parts list for the corresponding valve kit or o-ring kit part number.

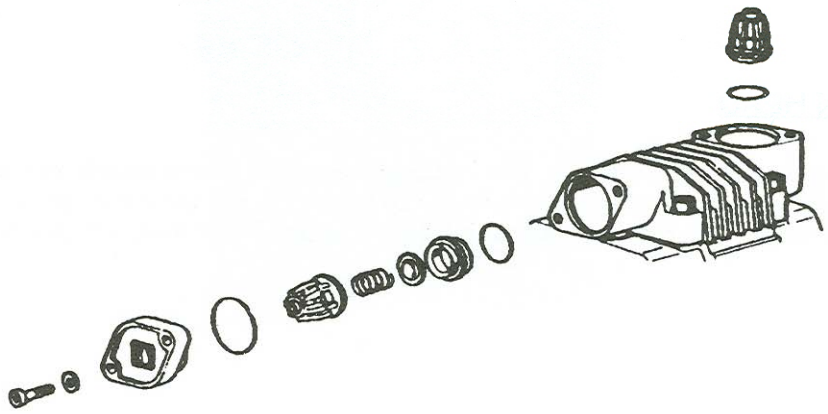

DIAPHRAGM REPLACEMENT

1. Remove the pump heads one by one.
2. Use a wrench to remove the diaphragm bolt, diaphragm and support washer.
3. If you removed the piston sleeves, replace them one at a time in their previous position. It is a good idea to mark them as they are removed.
4. Insert the new diaphragm on the piston and install it with its bolt. Use these tightening torques:

				Diaphragm Bolt Size	Torque
M 6 x 1	=	5	N.m.	6 mm	44 inch-pounds
M 8 x 1,25	=	12	N.m.	8 mm	106 inch-pounds
M 10 x 1,25	=	25	N.m.	10 mm	221 inch-pounds

The diaphragms should be replaced with the piston at its bottom and the edges inserted perfectly into the groove all the way around.

5. Replace the heads and attach them with their bolts.
6. Refill pump with oil through the reservoir and rotate the shaft to distribute oil and fill to proper level. Repeat all the checks described above in the section "Checks to make before using the pump."
7. Check the oil level with the pump running and without pressure until all air bubbles have been vented. Close the cap on the oil sight tube after the air has been completely emptied.
8. After the first inspection of the oil level as above, check the oil level again with the pump running with pressure.

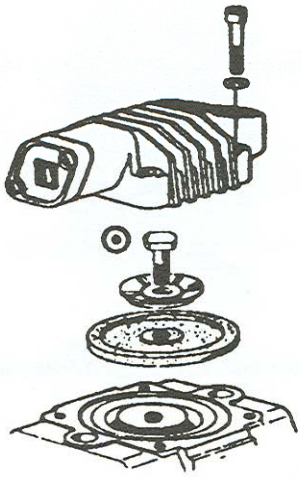

OIL CHANGE:

Change oil after 500 hours as follows:

1. Remove the tank plug and the drain plug.
2. Rotate the shaft until the oil stops flowing.
3. Wash inside parts with diesel oil.
4. Put the drain plug and pour oil (SAE 30) slowly into sight tube while turning the pump shaft.
5. Start the pump at zero ("0") pressure for a few minutes to allow the correct lubrication of inside parts.
6. While the pump is operating, check the oil level inside the reservoir.
7. If necessary, fill oil to proper level.

WARNING: Too much oil causes pressure into the crankcase and this can result in leakage or diaphragm failures.

For pumps without the drain plug, it is not necessary to periodically change the oil. However, the oil should be changed when replacing diaphragms.

COUPLING TO AGRICULTURAL MACHINERY

1. Check that the PTO of the machine does not exceed the maximum rpm shown on the pump plate.
2. Synchronized the PTO with the motor speed, consult the service manual to get the gear number and rpm corresponding to the maximum pump rotation speed.
3. When the rpm of the PTO is higher than the maximum speed, use the suggested reduction gear.
4. Disconnect PTO when moving pump out of service. If that is impossible, then disengagement should be provided.

COUPLING TO ELECTRIC MOTORS AND GASOLINE ENGINES

For direct coupling always use the suggested reduction gear.

For coupling with pulley, check alignment of the two pulleys.

$$\text{Maximum Transmission Ratio} \quad \frac{\text{Motor RPM}}{\text{Max Pump RPM}} = K$$

After determining K, you can establish the motor or pump pulley diameter:

$$\text{Motor Pulley Pitch Diameter} = \frac{\text{Pump Pulley Pitch Diameter}}{\text{Pump RPM}} = K$$

$$\text{Pump Pulley Pitch Diameter} = \text{Motor Pulley Pitch Diameter} \times K$$

WARNING: All wiring should be done by a qualified electrician.

WARNING: Do not handle a pump or pump motor with wet hands or when standing on a wet damp surface, or in water.

For special installation or application consult our Technical Department for the necessary modifications.

ORIGINAL SPARE PARTS

Only use original spare parts, otherwise warranty will be declined.

Always enter the serial number printed on the pump label.

When ordering parts, please specify the following:

- pump model
- part number
- description
- quantity
- means of shipment

PRESSURE REGULATOR OPERATING INSTRUCTIONS

Before starting, turn the valve lever counterclockwise to the dump position (by-pass flow). Failure to follow this will void the warranty on the pump.

Turn the adjustment knob counterclockwise to decrease the pressure to zero ("0") psi. In the initial start-up, this is absolutely recommended.

When the valve is in the by-pass line, start the unit and let it run for at least two (2) minutes or until oil is displaced in the cylinder and air is evacuated from circuit.

Turn the valve lever clockwise to pressure position, close the spray gun or spray boom. Turn the adjustment knob clockwise to achieve operating pressure. Then open the spray gun or spray boom.

CHEMICAL RESISTANCE CHART

The recommendations in the chart below are based upon information from material suppliers and careful examination of available published information and are believed to be accurate. The resistance of metals, plastics and elastomers may be affected by concentration, temperature, presence of other chemicals and other factors. This information should be considered as a general guide rather than an unqualified guarantee. All recommendations assume ambient temperatures unless otherwise noted. The ratings for these materials are based upon the chemical resistance only. can

Buna N Material	Vitron	(Nitrite)
Acetaldehyde	A	B
Acetamide	A	A
Acetate Solv.[2]	D	D
Acetic Add. Glacia[1]	D	D
Acetic Acid 20%	D	C
Acetic Acid 80%	D	C
Acetic Add	C	C
Acetic Anhydride	D	A

Buna N Material	Vitron	(Nitrite)
Acetone	D	D
Acetylene[2]	A	A
Acryionitrile	C	D
Alcohols Amyl	A	A
Benzyl	A	D
Butyl	A	A
Diacelone[2]	D	D

Buna N Material	Vitron	(Nitrite)
Ethyl	A	A
Hezyl	A	A
Isobutyl	A	C
Isopropyl	A	C
Methyl	C	B
Octyl	A	B
Propyl;	A	A

A = Acceptable, No effect
B = Acceptable, Minor effect
C = Questionable, Moderate effect
D = Not Recommended. Severe effect

DP-185.1

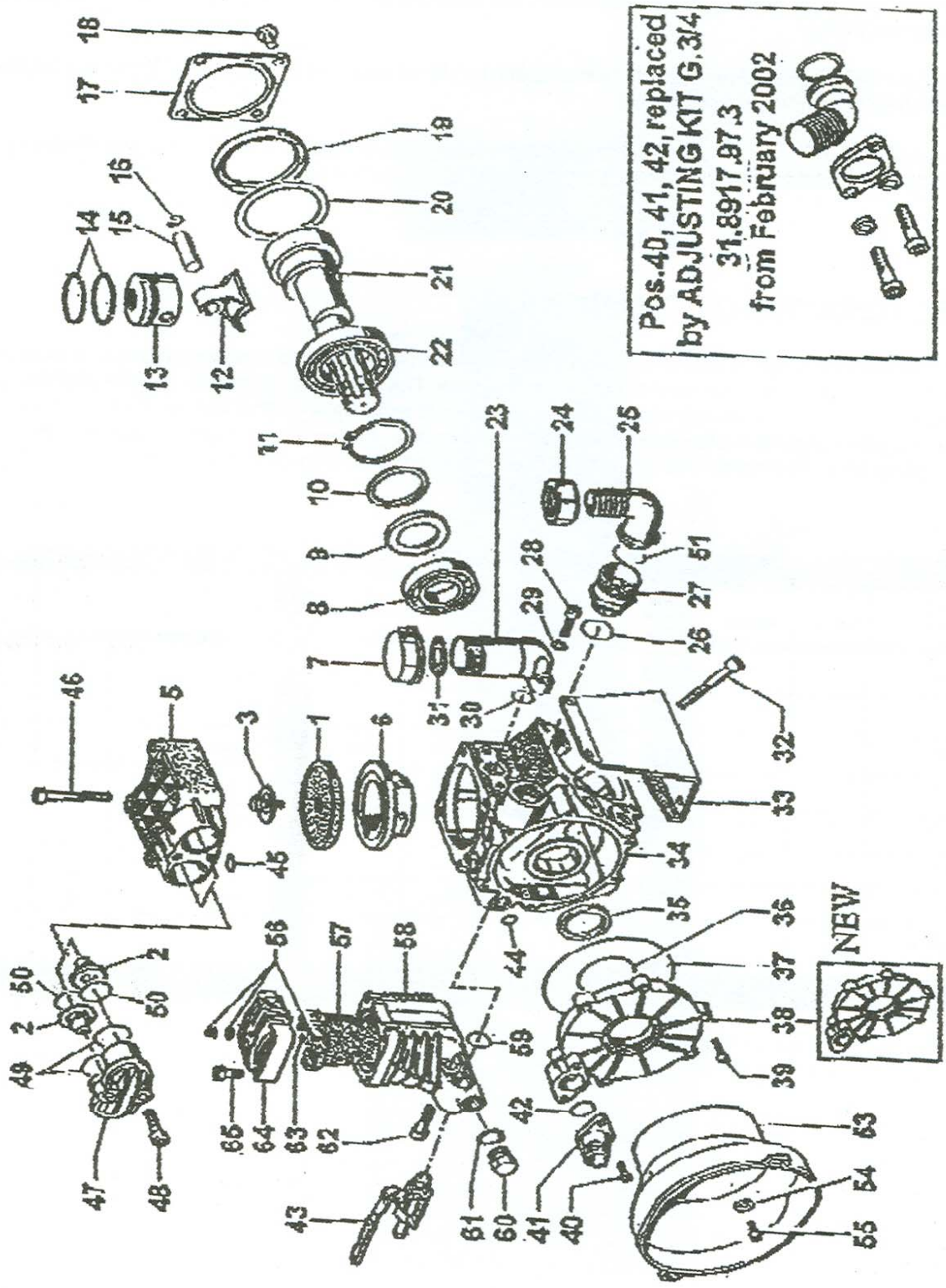
Pos.40, 41, 42, replaced by ADJUSTING KIT G.3/4 31.8917.97.3 from February 2002
NEW

PARTS LIST FOR DP-185.1

POS	PART NO.	DESCRIPTION	QTY	POS	PART NO.	DESCRIPTION	QTY
* 1	DP-23001131	PISTON DIAPHRAGM	3	32	DP-86359000	SCREW M10X80	8
^ 2	DP-23980597	VALVE ASSY	6	33	DP-23003361	MOUNTING BRACKETS	2
3	DP-23005597	SS DIAPH WASHER & BOLT	3	34	DP-23000109	CRANKCASE	1
5	DP-23005209	HEAD	1	* 35	DP-80213450	RETAINING RING	1
6	DP-23003801	PISTON SLEEVE	3	* 36	DP-80320980	O-RING	1
7	DP-85275000	PLUG 1-1/2	1	* 37	DP-80321068	O-RING	1
8	DP-81284600	BALL BEARING	1	38	DP-23004609	CRANKCASE COVER	1
9	DP-23001976	RING	1	39	DP-86221600	SCREW M6X25	6
10	DP-26004776	CONROD CLAMPING RING	1	40	DP-86216800	BOLT 6X22MM	2
11	DP-80137700	SEEGER RING	1	41	DP-31109609	DISCHARGE	1
12	DP-23000509	CONNECTING ROD	3	42	DP-80321800	O-RING	1
13	DP-23004009	PISTON	3	43	DP-84554410	TURN VALVE	1
14	DP-81851400	PISTON RING	6	* 44	DP-80317600	O-RING 2,62X11,91	1
15	DP-85200700	PISTON PIN	3	* 45	DP-80318900	O-RING 2,62X18,72	6
16	DP-80002100	RING	6	46	DP-86357500	BOLT 10X75MM	4
17	DP-17001361	CAP	1	47	DP-23000309	END COVER	3
18	DP-86318500	GALV. SCREW M10X16	4	48	DP-86330000	SCREW M10X30	6
* 19	DP-80226410	O-RING 68X90X10	1	^* 49	DP-80321920	O-RING	6
20	DP-17002476	SPACER	1	^* 50	DP-80320700	O-RING	6
21	DP-23002326	CRANKSHAFT	1	* 51	DP-80321900	O-RING	1
22	DP-81297200	BALL BEARING	1	56	DP-86160850	AIR VALVE	1
23	DP-23000832	OIL FILLER	1	* 57	DP-23004131	BALLASTER DIAPHRAGM	1
24	DP-82006700	WING NUT	1	58	DP-23003909	DAMPER BODY	1
25	DP-84057001	90 DEGREE ELBOW		* 59	DP-80318200	O-RING	1
26	DP-80320700	O-RING 2,62X29,82	1	60	DP-85257900	PLUG	1
27	DP-83509018	NIPPLE	1	61	DP-82410700	GASKET	1
28	DP-86273000	SCREW M8X30	2	62	DP-86398500	SCREW M12X50	1
29	DP-84368500	WASHER	2	* 63	DP-80321300	O-RING	1
* 30	DP-80318000	O-RING 2,62X15, 08	1	64	DP-11000409	BALLASTER COVER	1
31	DP-82412000	GASKET	1	65	DP-86273000	SCREW M8X30	4

^ = DP-23989197 - VALVE KIT

* = DP-23989297 - PUMP KIT

NOTE FOR NO. 40, 41 & 42, ORDER DISCHARGE FITTING KIT DP-31891797

CDS-JOHN BLUE COMPANY

DIVISION OF ADVANCED SYSTEMS TECHNOLOGY, INC.
290 Pinehurst Drive • Huntsville, Alabama 35806
P. O. Box 1607 • Huntsville, Alabama 35807
Telephone: (256) 721-9090 • FAX (256) 721-9091
Call Toll Free: 1-800-253-2583

TROUBLES AND CURES

TROUBLES	CAUSES	CURES
The pump doesn't reach the required pressure	• valves have worn seats • suction hose with air pockets or irregular elbows • worn nozzles or with wrong diameter (see chart) • Clogged strainer	• check valves • check hoses • check nozzles • clean strainer
The pressure gauge fluctuates	• pump is sucking air, or air hasn't been evacuated completely • valves blocked	• start pump with the gun open, to evacuate the air and commutate • clean and change valves
The liquid flow is irregular	• the air in the pulsation-damper is incorrectly set	• check pressure in pulsation damper (see chart)
Output drops and the pump is noisy	• oil level is too low	• top up with oil to correct level (halfway of the sump), when pump is operating
Oil comes out of the discharge pipe	• one or more diaphragms are broken	• Drain the pump of oil. Dismantle the head and change diaphragms. Fill to the correct oil level.
Oil is changing color into white	• Diaphragm failures. Stop pump immediately.	• Drain the pump of oil. Dismantle the head and change diaphragms. Fill to the correct oil level.

LIMITED WARRANTY

THIS WARRANTY IS IN LIEU OF ALL OTHER WRITTEN OR EXPRESS WARRANTIES AND REPRESENTATIONS. ANY IMPLIED WARRANTIES INCLUDING MERCHANTABILITY OR FITNESS FOR ANY PARTICULAR PURPOSE ARE EXPRESSLY LIMITED TO THIS WRITTEN WARRANTY. CDS-JOHN BLUE COMPANY SHALL NOT BE LIABLE FOR CONSEQUENTIAL DAMAGES.

Each new machine or component manufactured by CDS-John Blue Company through original buyer for a period of 6 months* against defects in material and workmanship. Warranty begins when CDS-John Blue Company or a retail representative thereof delivers a new unit to anyone considered to be a user. This 6 months period must fall within one year from date of delivery from factory.

The obligation of CDS-John Blue Company under this warranty is limited to the repair or replacement, at CDS-John Blue's option, of the defective parts. This repair or replacement shall be free of charge to original purchaser once examination of parts, or written acceptance by CDS-John Blue Company allowing warranty coverage has occurred.

Parts requiring return to factory must be through original purchaser/dealer, freight prepaid, and within 30 days of failure. Upon validation of warranty coverage freight allowance will be made. Parts returned must have factory approval documentation prior to return.

When it is impractical to return a defective unit to CDS-John Blue factory, CDS-John Blue accepts only the liability to supply the materials necessary to replace or repair the unit. This liability begins once CDS-John Blue Company has determined to its satisfaction the unit to be eligible for warranty coverage.

CDS-JOHN BLUE COMPANY IS NOT LIABLE FOR INJURY OR DAMAGES OF ANY KIND OR NATURE, DIRECT, CONSEQUENTIAL, OR CONTINGENT TO PERSON OR PROPERTY. THIS WARRANTY DOES NOT EXTEND TO LOSS OF CROPS, LOSS BECAUSE OF DELAY OR ANY EXPENSE/LOSS INCURRED FOR LABOR, SUPPLIES, SUBSTITUTE MACHINERY, RENTAL OR FOR ANY OTHER REASON.

This warranty does not apply to any unit altered or repaired outside CDS-John Blue factory, nor does it apply to any unit determined by CDS-John Blue to have been subjected to misuse, negligence, abuse, or accident.

CDS-John Blue Company makes no warranties in respect to parts, accessories or components not manufactured by CDS-John Blue Company. Respective manufacturers' warranties are applicable.

* NH^3 METERS CARRY ONE YEAR WARRANTY.

DIVISION OF ADVANCED SYSTEMS TECHNOLOGY, INC. HUNTSVILLE, AL (256) 721-9090