Fig. 137C: Plastic Coated U-Bolts



Size Range: 1/2" through 8"
Material: Carbon steel U-bolt and four finished hex nuts. Formed portion of the U-bolt is plastic coated.
Maximum Temperature: 225° F
Service: Recommended for support or guide for glass, copper, brass and aluminum pipe.
Approvals: Complies with Federal Specification A-A-1192A (Type 24), *WW-H-171-E (Type 24),* ANSI/MSS SP-69 and MSS SP-58 (Type 24).
Ordering: Specify pipe size x rod size (e.g., 2 x 3/8), figure number and name. If hex nuts are not required, specify "without hex nuts".

FIG. 137C: LOADS (LBS) • WEIGHTS (LBS) • DIMENSIONS (IN)

Pipe Size	Rod Size A	Max Load	Weight	B	C	D	E	F
1/2	1/4	580	0.11	15/16	1 3/16	2 3/4	2 1/8	2 5/16
3/4			0.12	1 1/8	1 3/8			2 7/32
1			0.12	1 3/8	1 5/8			2 3/32
1 1/4	3/8	1,460	0.28	1 11/16	2 1/16	2 7/8		2 1/32
1 1/2			0.30	2	2 3/8	3	2 1/2	2 1/16
2			0.33	2 7/16	2 13/16	3 1/4		
2 1/2	1/2	2,700	0.73	2 15/16	3 7/16	3 3/4	3	2 5/16
3			0.78	3 9/16	4 1/16	4		2 1/4
3 1/2			0.84	4 1/16	4 9/16	4 1/4		
4			0.90	4 9/16	5 1/16	4 1/2		
5			1.00	5 5/8	6 1/8	5		2 7/32
6	5/8	4,320	2.00	6 3/4	7 3/8	6 1/8	3 3/4	2 13/16
8			2.30	8 3/4	9 3/8	7 1/8		

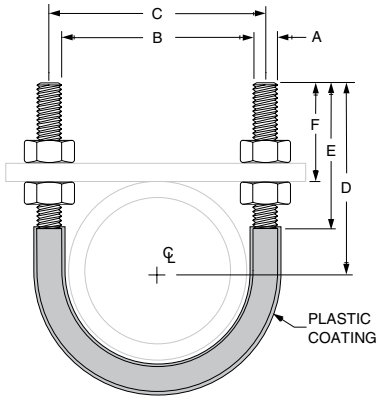

PROJECT INFORMATION	APPROVAL STAMP
Project:	☐ Approved
Address:	☐ Approved as noted
Contractor:	☐ Not approved
Engineer:	**Remarks:**
Submittal Date:	
Notes 1:	
Notes 2:	