Series 1000SS

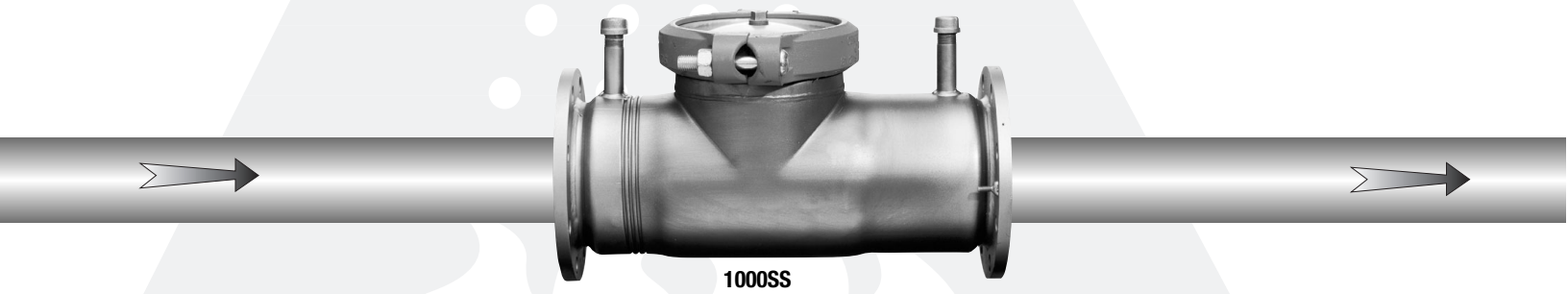

1000SS

Detector Check Valve Assemblies

Sizes: 4" – 10" (100 – 250mm)

- Installation
- Service
- Repair Kits
- Maintenance

For other repair kits and service parts, send for Ames Repair Parts Price List, PL-A-RP-BPD.

For technical assistance, contact your local Ames representative.

IMPORTANT: Inquire with governing authorities for local installation requirements.

Its important that this device be tested periodically in compliance with local codes, but at least once per year or more as service conditions warrant. If installed on a fire sprinkler system, all mechanical checks, such as alarm checks and backflow preventers, should be flow tested and inspected internally in accordance with NFPA 13 and NFPA 25.

CALIFORNIA PROPOSITION 65 WARNING

WARNING: This product contains chemicals known to the State of California to cause cancer and birth defects or other reproductive harm. (California law requires this warning to be given to customers in the State of California.)

For more information: www.watts.com/prop65

Limited Warranty: Ames Fire & Waterworks (the "Company") warrants each product to be free from defects in material and workmanship under normal usage for a period of one year from the date of original shipment. In the event of such defects within the warranty period, the Company will, at its option, replace or recondition the product without charge.
THE WARRANTY SET FORTH HEREIN IS GIVEN EXPRESSLY AND IS THE ONLY WARRANTY GIVEN BY THE COMPANY WITH RESPECT TO THE PRODUCT. THE COMPANY MAKES NO OTHER WARRANTIES, EXPRESS OR IMPLIED. THE COMPANY HEREBY SPECIFICALLY DISCLAIMS ALL OTHER WARRANTIES, EXPRESS OR IMPLIED, INCLUDING BUT NOT LIMITED TO THE IMPLIED WARRANTIES OF MERCHANTABILITY AND FITNESS FOR A PARTICULAR PURPOSE.
The remedy described in the first paragraph of this warranty shall constitute the sole and exclusive remedy for breach of warranty, and the Company shall not be responsible for any incidental, special or consequential damages, including without limitation, lost profits or the cost of repairing or replacing other property which is damaged if this product does not work properly, other costs resulting from labor charges, delays, vandalism, negligence, fouling caused by foreign material, damage from adverse water conditions, chemical, or any other circumstances over which the Company has no control. This warranty shall be invalidated by any abuse, misuse, misapplication, improper installation or improper maintenance or alteration of the product.
Some States do not allow limitations on how long an implied warranty lasts, and some States do not allow the exclusion or limitation of incidental or consequential damages. Therefore the above limitations may not apply to you. This Limited Warranty gives you specific legal rights, and you may have other rights that vary from State to State. You should consult applicable state laws to determine your rights. **SO FAR AS IS CONSISTENT WITH APPLICABLE STATE LAW, ANY IMPLIED WARRANTIES THAT MAY NOT BE DISCLAIMED, INCLUDING THE IMPLIED WARRANTIES OF MERCHANTABILITY AND FITNESS FOR A PARTICULAR PURPOSE, ARE LIMITED IN DURATION TO ONE YEAR FROM THE DATE OF ORIGINAL SHIPMENT.**

Installation Instructions

NOTE: Ames assemblies require minimum maintenance. All assemblies must be retested once maintenance has been performed. Before servicing be certain shut off valves are closed.

A. The installation and maintenance of any Ames Detector Check Valve should be performed by a qualified licensed technician. Failure to do so may result in a malfunctioning assembly. All instructions should be read thoroughly by the technician before installation or performing any maintenance on the assembly.

B. Before installing an Ames Detector Check Valve, flush the lines thoroughly to remove all debris, chips and other foreign objects. Failure to do so may make the assembly inoperable.

C. **Allow sufficient clearance around the installed assembly to conduct testing,** servicing and inspection. Allow a minimum of 12" from the flood level to the bottom of the assembly.

D. **Be sure to contact local code authorities for proper installations.**

INSTALLATION NOTE: The flange gasket bolts for the gate valves should be retightened during installation as the bolts may have loosened due to storage and shipping.

ATTENTION INSTALLER: After installation, please leave this Instruction Sheet for occupant's information.

4" and 6" (100-150mm) Cam-Check Removal

Removing Cam-Check

Place yourself so that the water flow through the valve is left to right.

1. **Shut down** water system by closing two gate valves and lock out system if possible. Slowly open bleed port to relieve internal pressure. After pressure is relieved, loosen bolts on groove coupler and remove groove coupler and copper plate from valve body.
2. **Unscrew** (counter clockwise as viewed through the port facing the check) the Cam-Check. Insert the two grooved coupler bolts into the holes in the face of the seat. Be sure that the pins or bolts are installed with one on each side of the cam bar as shown. Insert a long screwdriver or pry bar between opposing pins and loosen the check counter clockwise) until it comes free to turn by hand. Finish unscrewing the Cam-Check by hand using the support ears for the clapper and cam bar to turn the check. (See fig #1A)
3. **Lift** the Check straight up and out of the port access hole.

Figure #1A

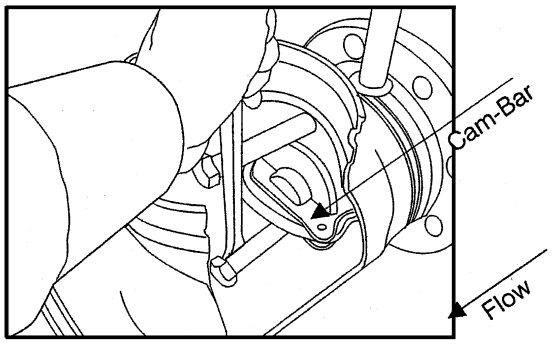

4" and 6" (100-150mm) Cam-Check Installation

Install the Cam-Check

Prior to installing the Cam-Check, ensure that all threads are clean and free of debris, grit, or other particles. Thoroughly clean O-rings grooves and lubricate O-rings with an FDA approved lubricant.

1. **Insert** the Cam-Check through the cover port with the clapper facing down. Align the threads of the Cam-Check with the threads in the body and start to thread the Check in by hand - using the ears which extend from the seat ring to turn the check assembly. DO NOT use the clapper or the cam bar to turn the check assembly.
2. **Tighten** the Cam-Check. Insert grooved coupler bolts into the holes in the face of the seat (or use the bolts from the lid groove coupler). Be sure that the pins or bolts are installed with one on each side of the cam bar. Insert a long screw driver or pry bar between opposing pins and tighten the check (clockwise as viewed through the port facing the check) until it comes to a solid stop. The back the check out about 15 degrees or from the 1:00 position to the 12:00 position. (See Fig #1B).

Figure #1B

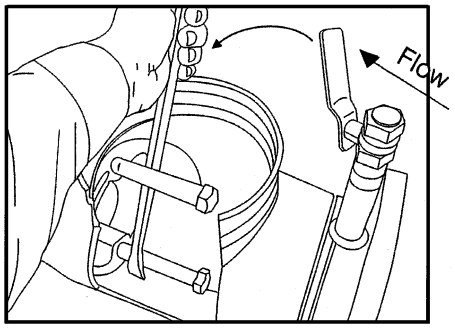

START UP: After re-installation of the cover plate and groove coupler — the downstream shutoff valve should be closed. Open upstream gate slowly, fill the valve and bleed the air through bleed port. When valve is filled, open the downstream shut off slowly. Failure to bleed air from assembly may cause water hammer or shock damage to the water system.

Repair Parts

Item #	Part Description	Qty.	Ames Part No. 4" (100mm)	6" (150mm)
1.	Cam-Check Assembly	1	7015580	7016695
2.	Cam-Check O-ring (removable)	1	7013229	7013301
3.	Groove Coupler	1	7013194	7013287
4.	Groove Coupler Gasket	1	7013248	7013308
5.	Cover Plate	1	7013241	7013289

Figure 2

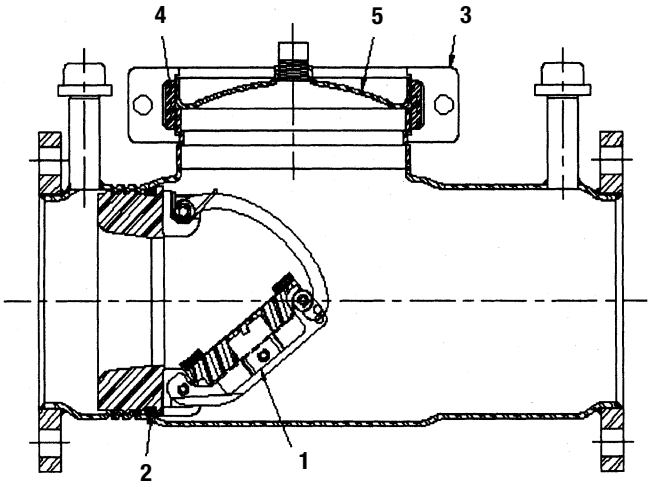

Figure 3

#1 Cam-Check

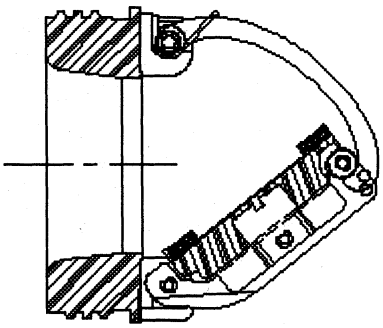

4" and 6" (100-150mm) Cam-Check Disassembly

Please use caution when disassembling cam-check.

Figure 4

Using a thin rod or screwdriver, lift the cambar up so that the clapper is free to swing upwards away from the seat.

Figure 5

Using your free hand, swing the clapper open until the roller is almost to the free end of the cambar. Align the maintenance lockout holes in the cambar and the hinge arms.

Secure the check assembly in the maintenance position by inserting a rod or thin screwdriver through the lock-out holes.

Figure 6

Remove 1 c-clip from the center pivot pin. Withdraw the centerpivot pin from the clapper and the hinge arms. Remove the clapper assembly from the check assembly module.

Note: You may replace this item as an assembly.

Figure 4

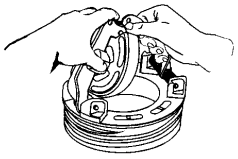

Figure 5

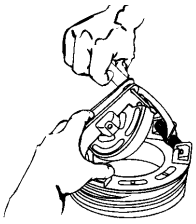

Figure 6

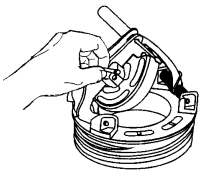

Repair Parts

Item #	Part Description	Qty.	Ames Part No. 4" (100mm)	6" (150mm)
1.	1st Cam-Check O-ring (removable)	1	7013229	7013301
2.	Clapper Assembly (removable)	1	7016899	7016900
3.	Pivot Arm Pin (removable) 2 c-clips	1	7013853	7013841

Figure 7

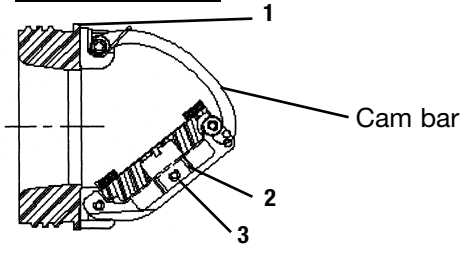

8" and 10" (200-250mm) Knuckle Joint Assembly Removal and Installation

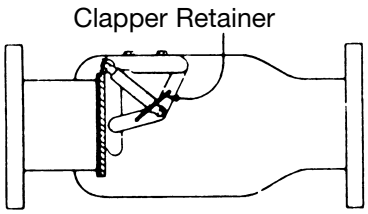

Diagram 1

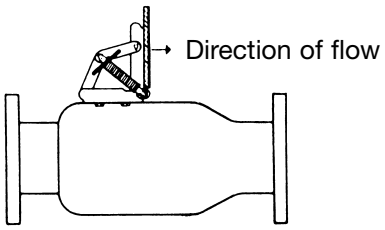

Diagram 2

1. Shut down water system and lock out if possible.
2. Loosen vent screw in lid slowly to ensure system pressure has been relieved.
3. Loosen and remove all inspection port bolts and remove lid and gasket from valve.
4. Install proper size clapper retainer clip (see diagram 1). Be sure clip is pushed to within ½" of linkage.
5. Loosen equally the two knuckle joint mounting bolts, until assembly is free. As bolts are loosed linkage will release slightly and lock clapper retainer clip in place.
6. Remove knuckle joint from body assuring clapper retainer clip is not disturbed, as preloaded knuckle joint springs have considerable tension in this position.
7. Bolt the knuckle joint to the outside of the body using the new ⅜" bolts supplied with the new knuckle joint (see diagram 2).
8. Push on clapper plate to release clapper retainer clip, remove and slowly release tension on clapper. Unbolt knuckle joint assembly from outside of body.
9. Bolt replacement knuckle joint assembly to body as in step 7.
10. Push on clapper plate to extend springs and install clapper retainer clip, making sure springs are seated on pins. Unbolt knuckle joint assembly from body bolt hole.
11. Insert two new ⅜" mounting bolts and washers through mounting holes in body. Position knuckle joint in place inside body, and finger tighten both bolts.
12. Torque knuckle joint mounting bolts to 60 inch-pounds. Remove clapper retainer clip.
13. Replace lid and gasket.

Repair Parts

Item #	Part Description	Qty.	Ames Part No. 4" (100mm)	Ames Part No. 6" (150mm)
1	Knuckle Joint Assembly (Complete Unit)	1	7015552	7015552
2	Clapper Plate With Attached Link (not shown)	1	7011413	7011413
3	Springs	3	7011323	7011323
4	3/8" Stainless Steel Bolts	2	7014619	7014619
5	Washer (not shown)	2	7014585	7014585
6	Bronze Seat (Replaceable in Line)	1	7011163	7011163
7	Seat O-Ring	1	A300706	A300706
8	Cover Plate	1	7011016	7011016
9	Groove Coupler	1	A605530	A605530
10	Clapper Retainer Clip (Diagram 1)	1	7013913	7013913

Knuckle Joint Assembly **1**

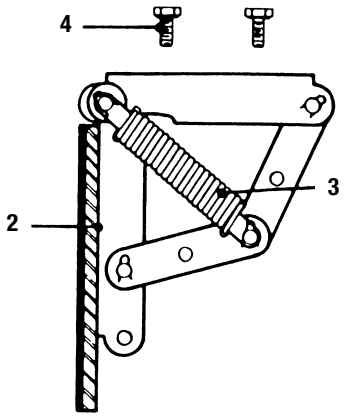

Housing Half Section

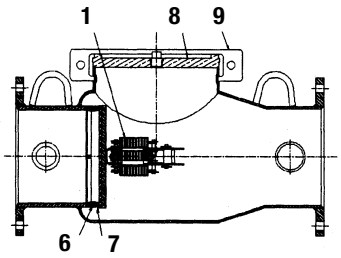

AMES FIRE & WATERWORKS

www.amesfirewater.com

ISO 9001-2000 CERTIFIED

A Division of Watts Water Technologies, Inc.

USA: Backflow- 1427 N. Market Blvd • Suite #9 • Sacramento, CA 95834 • T: 916-928-0123 • F: 916-928-9333
Control Valves- 18550 Hansen Road • Houston, TX 77075 • T: 713-943-0688 • F: 713-944-9445
Canada: 5435 North Service Rd. • Burlington, ONT. L7L 5H7• T: 905-332-4090 • F: 905-332-7068

©Ames Fire & Waterworks 2009