For Residential Applications

Job Name _____ Contractor _____

Job Location _____ Approval _____

Engineer _____ Contractor's P.O. No. _____

Approval _____ Representative _____

LEAD FREE*

Model OFTWH-RES

OneFlow® Anti-Scale System

Connection Sizes: ¾" (20mm)

Flow Rates: From 0.5 gpm to 6 gpm (1.9 lpm to 38 lpm)

The OneFlow® Anti-Scale System provides protection from scale formation on internal and external plumbing surfaces. The OneFlow® system is a single cartridge-based system that must be installed on a cold water line prior to a single water heating device (water heater or tankless water heater).

OneFlow® uses template assisted crystallization (T.A.C.) to attract hardness minerals and convert them into harmless, inactive microscopic crystal particles.

These crystals stay suspended in the water and are passed to drain. The system requires very little maintenance, no backwashing, no salt and no electricity. Typical hardness problems, especially build-up of scale in heating elements, pipes, water heaters, boilers and on fixtures are no longer a concern.

OneFlow® is not a water softener. It does not add chemicals. It is a scale prevention device with proven third party laboratory test data and years of successful commercial, residential and foodservice applications. OneFlow® is the intelligent scale solution and is a great alternative to water softening (ion exchange) or scale sequestering devices.

Features

- Chemical-free scale prevention and protection - converts hardness minerals to harmless, inactive microscopic crystals making OneFlow® an effective alternative to ion exchange water softeners
- Virtually maintenance free - No salt bags or other chemicals to constantly add or maintain
- No control valve, no electricity and no wastewater
- Uses environmentally friendly "green" technology
- Improves efficiency of all water heating devices and downstream plumbing components
- Simple sizing & installation – standard ¾" connections
- Perfect system for homes where equipment protection is desired for longer equipment life and reduced energy consumption
- Inlet ball valve for easy isolation shutoff and filter changes
- OneFlow® cartridge-based systems are easily maintained; change the cartridge once every two years
- Easily installed mounting bracket included w/filter wrench to allow cartridge change-outs when necessary

For hot water applications where untreated feed water temperature is 110°F - 150°F (43°C - 66°C), please consult ES-OneFlow-HotWater.



OFTWH-RES

Models

Model	Peak Flow Rate	Connection Size
OFTWH-RES	6 gpm (38 lpm)	¾" (20mm) FNPT

Replacement Cartridge

OFTWHRM-RES Cartridge should be replaced every 2 YEARS.

Specifications

A OneFlow® scale prevention system shall be installed on the cold water service line to condition the tap water just prior to the service line feeding the equipment it is designed to protect. The system will be sized for maximum or peak flow rate based on the specification of said equipment. A OneFlow® system may also be installed to protect multiple pieces of equipment from the ill-effects of hard water scale provided the aggregate peak flow rate for each piece of equipment it is protecting has been considered. The system shall be plumbed with a bypass valve to allow isolation of filter housing to allow the bypass of untreated water in the event that service or cartridge replacement be necessary. Bypass is recommended but not required. The installation area should be suitable in size for the housing to be serviced without encumbrance and the system should be installed per the Installation, Operation & Maintenance manual as provided with each system.

The OneFlow® system must not require additional wastewater to backwash, flush, or regenerate once put into service. The system shall not require any chemical additives and shall not require electricity for operation.

Note: Copper lines need to be passivated for a minimum of 4 weeks before placing unit into service. Not for use on closed loop systems.

***The wetted surface of this product contacted by consumable water contains less than 0.25% of lead by weight.**

Watts product specifications in U.S. customary units and metric are approximate and are provided for reference only. For precise measurements, please contact Watts Technical Service. Watts reserves the right to change or modify product design, construction, specifications, or materials without prior notice and without incurring any obligation to make such changes and modifications on Watts products previously or subsequently sold.

WATTS®

Water Chemistry & Limitations

pH	6.5 to 8.5
Hardness (maximum)	75 grains (1300 ppm CaCO3)
Temperature	35°F to 100°F (1.6° to 40°C)
Chlorine	< 3 ppm
Iron (maximum)	0.3 mg/l
Manganese (maximum)	0.05 mg/l
Copper	none allowed
Oil & H2S	none allowed
Polyphosphate	none allowed
Silica (maximum)	10 ppm

System Specifications

Maximum Pressure: 90psi/6.2 bar
Maximum Temperature: 100°F/38°C
Minimum Temperature: 35°F/2°C

Inlet/Outlet Connections: ¾" FNPT
Service Flow Rate (Peak): up to 6 gpm (38 lpm)

Gallon Rating (Continuous Flow Rate):

OFTWH-RES: up to 4 gpm, 24/7/365 for 2 years for the OFTWHRM-RES cartridge.

Capacity: OFTWHRM-RES cartridge does not have a grain removal capacity, however, other contaminants present in the water will gradually degrade the effectiveness of this cartridge. Change the OFTWHRM-RES cartridge at least once every two years.

Standards

Independent scientific testing has confirmed Template Assisted Crystallization (TAC) technology provides scale reduction of over 95+%. Testing was conducted under protocol based on DVGW W512 test to assess control of scale formation.

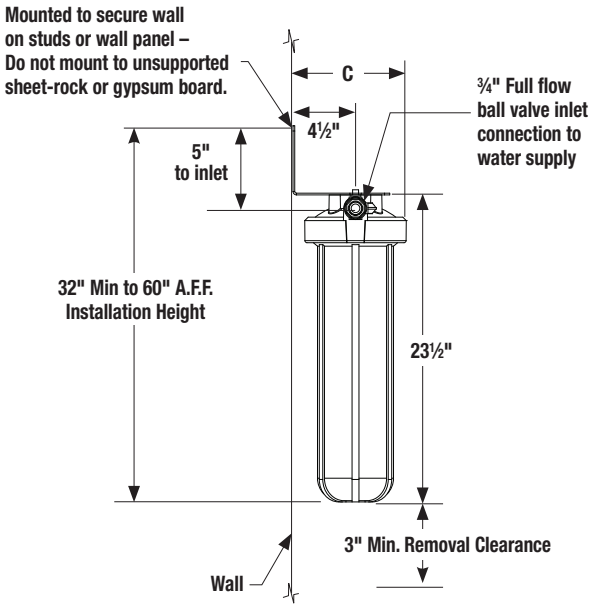

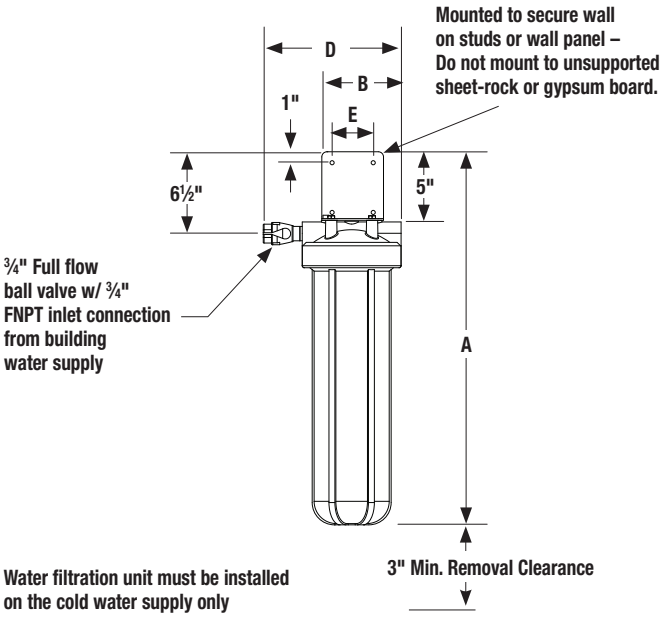

Dimensions — Weights

Model	Dimensions										Weight	
	A		B		C		D		E			
	in.	*mm*	*in.*	*mm*	*in.*	*mm*	*in.*	*mm*	*in.*	*mm*	*lbs.*	*kgs*
OFTWH-RES	28½	724	4½	114	8⅝	219	10	254	3	76	15	6.8

The overall height and the height of the inlet fitting varies due to material variations and assembly tolerances. Please allow additional clearance above the filter for making connections.

A Watts Water Technologies Company

USA: Tel: (978) 688-1811 • Fax: (978) 794-1848 • www.watts.com
Canada: Tel: (905) 332-4090 • Fax: (905) 332-7068 • www.watts.ca

© 2013 Watts