For Commercial Applications

Job Name _____ Contractor _____

Job Location _____ Approval _____

Engineer _____ Contractor's P.O. No. _____

Approval _____ Representative _____

Series PWC

Commercial Carbon Filter Systems

Connection Sizes: 1" to 3" (25 - 80mm)
Flow Rates: Up to 129 gpm (488 lpm)

PURE WATER

Watts Pure Water Series PWC activated carbon filters are highly effective backwashing media filtration systems for the removal of chlorine as well as taste, odor, and color caused by organics, from water.

They are suitable for commercial applications with dechlorination flow rates up to 129 gpm (488 lpm) with media bed sizes ranging from 1 to 35 cubic feet in size. If higher flow rates are required, multiple units can be installed in parallel. The media bed is cleaned of captured sediment by periodic backwashing and flushing. This cleaning cycle is time clock demand initiated and can be programmed to occur at any time that is convenient for the user. All steps of the cleaning cycle as well as returning to service are fully automatic and do not require manual actuation.

Watts Pure Water Series PWC activated carbon filters are designed for point of use or point of entry applications where dechlorinated water is required. Chlorine, an oxidizing agent, is added to municipal water to destroy micro-organisms. Chlorine causes the destruction of reverse osmosis membranes and polymer based ion exchange resins. Chlorine also causes objectionable tastes and odors in certain applications. Activated carbon in general is used for dechlorination, removal of taste, color, and odor caused by organics, as well as trace hydrocarbon removal from water. For applications involving trace hydrocarbon removal or taste, color, and odor removal due to organics, consult your Watts representative for proper sizing and carbon system selection. Watts Series PWC activated carbon filters utilize 12x40 mesh coconut shell carbon granules which are tailored for chlorine removal. Coconut shell carbon media has a high micro-porosity which makes it ideally suited for the removal of low molecular weight contaminants such as chlorine. Another advantage of this carbon is its superior hardness, which combined with a de-dusting process in its production, creates an exceptionally clean product with low fines.

These systems are ideal for food and bottled water processing, restaurant drink station water treatment, commercial ice production, soft drink water processing, reverse osmosis pretreatment, ion exchange resin pretreatment, and general dechlorination of municipal water.



Series PWC10 **Series PWC15** **Series PWC20** **Series PWC30**

Features

- WQA Certified fully automatic time clock initiated control valve
- Sophisticated digital electronic controls that store operating history that can be accessed by the user
- Fully adjustable backwash and flush cycles
- Durable brass bodied control valve for years of service
- Dry contact lock out switch for remote interface is standard
- High surface area, with a minimum of 1,050 m^2/g, low carbon fines, and coconut shell carbon
- Highly corrosion resistant NSF Certified fiberglass tanks
- Durable polypropylene lower distribution system

Standards

Control Valve- WQA Certified to NSF/ANSI Std. 61
Mineral Tank- NSF Certified to ANSI Std. 44 or 61

Note: Do not use with water that is microbiologically unsafe or of unknown quality without adequate disinfection before or after the system.

Watts product specifications in U.S. customary units and metric are approximate and are provided for reference only. For precise measurements, please contact Watts Technical Service. Watts reserves the right to change or modify product design, construction, specifications, or materials without prior notice and without incurring any obligation to make such changes and modifications on Watts products previously or subsequently sold.

WATTS®

Specifications

Watts Pure Water Series PWC activated carbon filter system shall be installed on the building's main water line just after it enters the building. The installation point shall be after any backflow prevention or pressure regulating valves. Other installation options are to install a system just before the plumbing equipment or processes requiring dechlorinated water. In installations where the dedicated cold water make up to a water heater is the installation point, a backflow preventer and a thermal expansion tank must be installed as well. The system shall be installed with a bypass valve to allow for the shut down and removal of the unit without interrupting the water supply to the building. The filter system shall be a backwashing granular media bed type with digital programmable time clock initiated backwash and high capacity coconut shell carbon filter media. The carbon media shall be rated at 1,050 m^2/g minimum surface area and have a minimum iodine number of 1,000. The system shall include all components necessary for proper operation. Electrical requirements are 120 volt 60 hertz. A local drain is required to accept drain water from the system. The feed water pressure must not fall below 30psi or exceed 125psi. Water temperature must not fall below 34°F or exceed 110°F (1 - 43°C).

Feed Water Guidelines

pH	6 to 8.5
Water Pressure	30psi to 125psi (205 kPa to 8.5 bar)
Temperature	34 - 110°F (1 - 43°C)
Oil and H2S	None Allowed
Iron	Less than 1 ppm
Total Chlorine	Less than 5 ppm

* For all other guideline information please contact your Watts representative.

Dimensions - Weights

PWC10

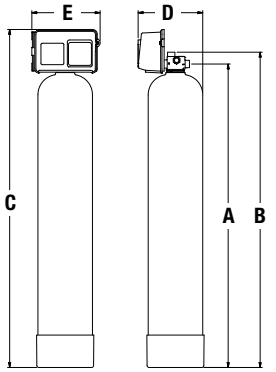

MODEL NO.	DIMENSIONS										WEIGHTS	
	A		B		C		D		E			
	in.	*mm*	*in.*	*mm*	*in.*	*mm*	*in.*	*mm*	*in.*	*mm*	*lbs.*	*kgs*
PWC10111A10	50 1/8	1273	52 3/8	1330	56 1/2	1435	11 1/2	292	12 3/4	324	90	41
PWC10111B10	56 1/4	1429	58 7/16	1484	62 5/8	1591	12	305	12 3/4	324	105	48
PWC10111C10	54 5/8	1387	56 13/16	1443	61	1549	13	330	12 3/4	324	117	53
PWC10111D10	67 3/8	1711	69 1/2	1765	73 3/4	1873	14 1/8	358	14 1/8	358	194	88

PWC15

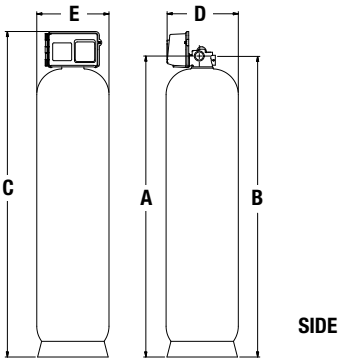

MODEL NO.	DIMENSIONS										WEIGHTS	
	A		B		C		D		E			
	in.	*mm*	*in.*	*mm*	*in.*	*mm*	*in.*	*mm*	*in.*	*mm*	*lbs.*	*kgs*
WC15121E10	66 3/8	1686	67 1/4	1708	72 3/4	1848	15 15/16	405	16 1/8	409	254	115
PWC15121G10	70	1778	71	1803	76 7/16	1941	21 1/8	536	21 1/8	536	471	214

PWC20

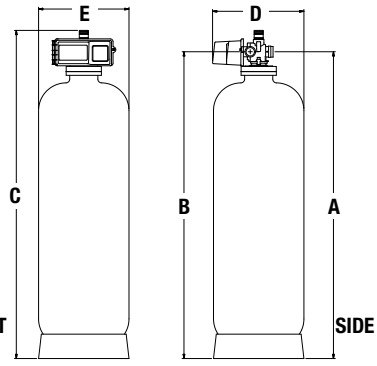

MODEL NO.	DIMENSIONS										WEIGHTS	
	A		B		C		D		E			
	in.	*mm*	*in.*	*mm*	*in.*	*mm*	*in.*	*mm*	*in.*	*mm*	*lbs.*	*kgs*
PWC20141H10	81 7/8	2079	81 7/8	2079	87 1/2	2222	24 7/16	620	24 1/8	612	735	334
PWC20141I10	83 3/8	2118	83 3/8	2118	89	2260	30 1/8	765	30 1/8	765	1432	651

PWC30

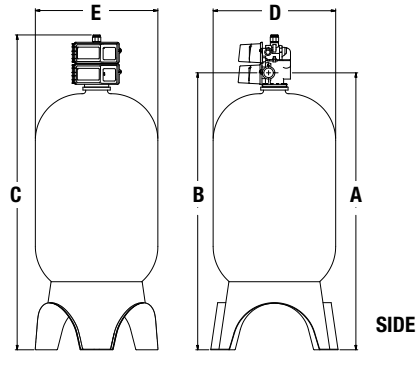

MODEL NO.	DIMENSIONS										WEIGHTS	
	A		B		C		D		E			
	in.	*mm*	*in.*	*mm*	*in.*	*mm*	*in.*	*mm*	*in.*	*mm*	*lbs.*	*kgs*
PWC30151J10	87 1/4	2216	87 1/4	2216	100	2540	36 1/8	917	36 1/8	917	1965	893
PWC30151K10	95 1/4	2419	95 1/4	2419	108 1/4	2750	44	1118	44	1118	3038	1381
PWC30151L10	99 5/8	2530	99 5/8	2530	112 5/8	2860	50 3/8	1280	50 3/8	1280	3645	1657

Specifications

MODEL NO.	MINERAL TANK TANK SIZE	CARBON Ft^3	UNDERBED 1/2 x 1/4 - 1/4 x 1/8 - #20	FLOW RATES FOR SERVICE AND BACKWASH SERVICE GPM CHLORINE REDUCTION	BACKWASH GPM
PWC10111A10	9" x 48"	1.0	- / - / 10 lbs	3.7 GPM	4.0 GPM
PWC10111B10	10" x 54"	1.5	- / - / 10 lbs	5.5 GPM	5.0 GPM
PWC10111C10	12" x 52"	2.0	- / - / 30 lbs.	7.4 GPM	7.0 GPM
PWC10111D10	14" x 65"	3.0	- / - / 60 lbs.	11.1 GPM	10 GPM
PWC15121E10	16" x 65"	4.0	- / - / 80 lbs.	14.8 GPM	12 GPM
PWC15121G10	21" x 62"	7.0	- / - / 100 lbs	25.9 GPM	26 GPM
PWC20141H10	24" x 72"	10	- / 100 lbs / 100 lbs	37 GPM	30 GPM
PWC20141I10	30" x 72"	15	- / 200 lbs / 200 lbs	55.5 GPM	50 GPM
PWC30151J10	36" x 72"	20	- / 300 lbs / 200 lbs	74 GPM	70 GPM
PWC30151K10	42" x 72"	30	- / 400 lbs / 200 lbs	111 GPM	90 GPM
PWC30151L10	48" x 72"	35	500 lbs / 500 lbs / 500 lbs	129.5 GPM	100 GPM

Ordering Information

MODEL NO.	DESCRIPTION	PIPE SIZE		SPACE REQUIRED W x D x H	WEIGHT LBS	KGS
PWC10111A10	1 Cubic Foot Carbon Filter with Auto Backwash		1"	10" x 11" x 60"	90	41
PWC10111B10	1.5 Cubic Foot Carbon Filter with Auto Backwash		1"	11" x 12" x 65"	105	48
PWC10111C10	2 Cubic Foot Carbon Filter with Auto Backwash		1"	13" x 14" x 65"	117	53
PWC10111D10	3 Cubic Foot Carbon Filter with Auto Backwash		1"	15" x 16" x 75"	194	88
PWC15121E10	4 Cubic Foot Carbon Filter with Auto Backwash		1.5"	17" x 18" x 75"	254	115
PWC15121G10	7 Cubic Foot Carbon Filter with Auto Backwash		1.5"	23" x 24" x 84"	471	214
PWC20141H10	10 Cubic Foot Carbon Filter with Auto Backwash		2"	27" x 27" x 95"	735	334
PWC20141I10	15 Cubic Foot Carbon Filter with Auto Backwash		2"	33" x 33" x 95"	1432	651
PWC30151J10	20 Cubic Foot Carbon Filter with Auto Backwash		3"	40" x 48" x 114"	1965	893
PWC30151K10	30 Cubic Foot Carbon Filter with Auto Backwash		3"	46" x 54" x 114"	3038	1381
PWC30151L10	35 Cubic Foot Carbon Filter with Auto Backwash		3"	52" x 60" x 114"	3645	1657

Notes: Flow rates are calculated at a 2 minute empty bed contact time (EBCT) for chlorine reduction. Do not use flow rates stated above for reduction of chloramines or organic compounds. Chloramines reduction requires a 17-22 minute EBCT. EBCT for organic compound reduction varies by organic compound. Pipe size, tank size, and space requirements are in inches.

© 2011 Watts