## *For Heating Applications*

Job Name _____ Contractor _____

Job Location _____ Approval _____

Engineer _____ Contractor's P.O. No. _____

Approval _____ Representative _____

# Series OTV-M1
## Oil Tank Valves

**Sizes: 1/2" x 3/8" (15 x 10mm)**

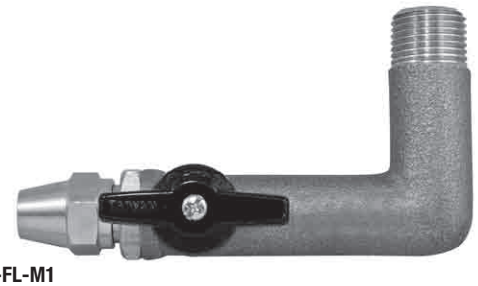

**OTV-FL-M1**

### Features

- 1/4 Turn ball valve design
- Heavy duty brass
- Adjustable packing nut
- PTFE seat and packing

### Pressure – Temperature

Working Pressure Non-Shock: 125psi WOG

### Dimensions – Weights

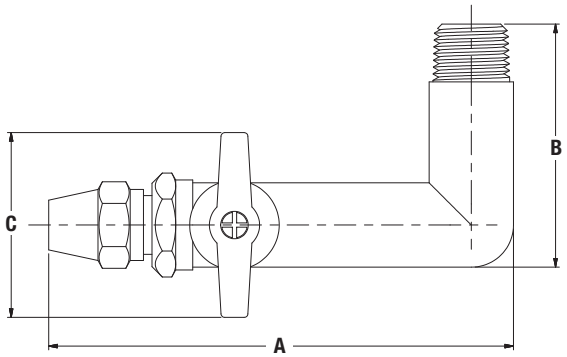


### Materials

Body: Brass
Stem: Brass
Seats: PTFE
Packing: PTFE
Packing nut: Brass
Flare nut*: Brass

*OTV-FL-M1 only

| MODEL | SIZE | | DIMENSIONS | | | | | | WEIGHT | |
|---|---|---|---|---|---|---|---|---|---|---|
| | | | A | | B | | C | | | |
| | *in* | *mm* | *in* | *mm* | *in* | *mm* | *in* | *mm* | *lbs.* | *kgs* |
| OTV-FL-M1 | ½ M x ⅜ FL | 15 x 10 | 4 15/16 | 125 | 2 9/16 | 65 | 1 15/16 | 49 | .76 | .34 |
| OTV-M-M1 | ½ M x ⅜ M | 15 x 10 | 4½ | 114 | 2 9/16 | 65 | 1 15/16 | 49 | .70 | .32 |

Watts product specifications in U.S. customary units and metric are approximate and are provided for reference only. For precise measurements, please contact Watts Technical Service. Watts reserves the right to change or modify product design, construction, specifications, or materials without prior notice and without incurring any obligation to make such changes and modifications on Watts products previously or subsequently sold.

ISO 9001-2008 CERTIFIED

U.S. GREEN BUILDING COUNCIL MEMBER

WATTS®

*A Watts Water Technologies Company*

**USA:** No. Andover, MA • Tel. (978) 688-1811 • Fax: (978) 794-1848 • www.watts.com
**Canada:** Burlington, ON • Tel. (905) 332-4090 • Fax: (905) 332-7068 • www.wattscanada.ca



© 2011 Watts