**SPECIFICATION SHEET**

# Model 758A

## "Y" Strainers

### Size: 2½" - 10" (65mm - 250mm)

The FEBCO Series 758A "Y" strainers are installed in water piping systems to protect expensive equipment (such as backflow preventers) from damage or failure that can be caused by foreign material in the pipeline.



**Model 758A**

## Features

- Unplugged, NPT blowoff connections are situated on cover
- Recessed screen seats assure accurate screen alignment
- Screens are perforated 304 stainless steel

## Pressure – Temperature

Non-Shock, 200psi @ 150° (13.8 bar @ 60°C)

## Materials

| | |
|---|---|
| Body: | Cast Iron, ASTM A126-B |
| Cap/Cover: | Carbon Steel, ASTM A36 |
| Gasket: | Non-asbestos |
| Screen: | 2½" - 4" (65 - 100mm) (1/16" Perf.)<br>6" - 10" (150 - 250mm) (1/8" Perf.) |

## Dimensions – Weights

**Size: 2½" - 10" (65 - 250mm)**

| SIZE (DN) | | DIMENSIONS | | | | | | WEIGHT | |
|---|---|---|---|---|---|---|---|---|---|
| | | A | | B | | C (NPT) | | | |
| *in.* | *mm* | *in.* | *mm* | *in.* | *mm* | *in.* | *mm* | *lbs.* | *kgs.* |
| 2½ | 65 | 10 | 254 | 6½ | 165 | 1 | 25 | 28 | 12 |
| 3 | 80 | 10⅛ | 257 | 7 | 178 | 1 | 25 | 34 | 15 |
| 4 | 100 | 12⅛ | 308 | 8¼ | 210 | 1½ | 40 | 60 | 27 |
| 6 | 150 | 18½ | 470 | 13½ | 343 | 2 | 50 | 133 | 60 |
| 8 | 200 | 21⅝ | 549 | 15½ | 394 | 2 | 50 | 247 | 112 |
| 10 | 250 | 26 | 660 | 18½ | 470 | 2 | 50 | 370 | 168 |

**Note:** Dimensions are nominal. Allowances must be made for normal manufacturing tolerances.

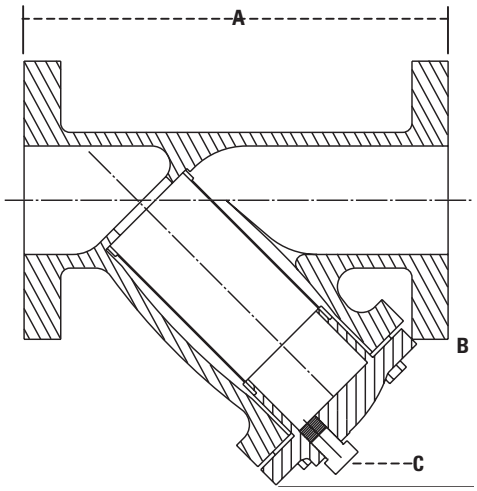


Job Name _____ Contractor _____

Job Location _____ Approval _____

Engineer _____ Contractor's P.O. No. _____

Approval _____ Representative _____

FEBCO product specifications in U.S. customary units and metric are approximate and are provided for reference only. For precise measurements, please contact FEBCO. FEBCO reserves the right to change or modify product design, construction, specifications, or materials without prior notice and without incurring any obligation to make such changes and modifications on FEBCO products previously or subsequently sold.

## Capacity

**Series 758A Screwed End "Y" Type Strainer**

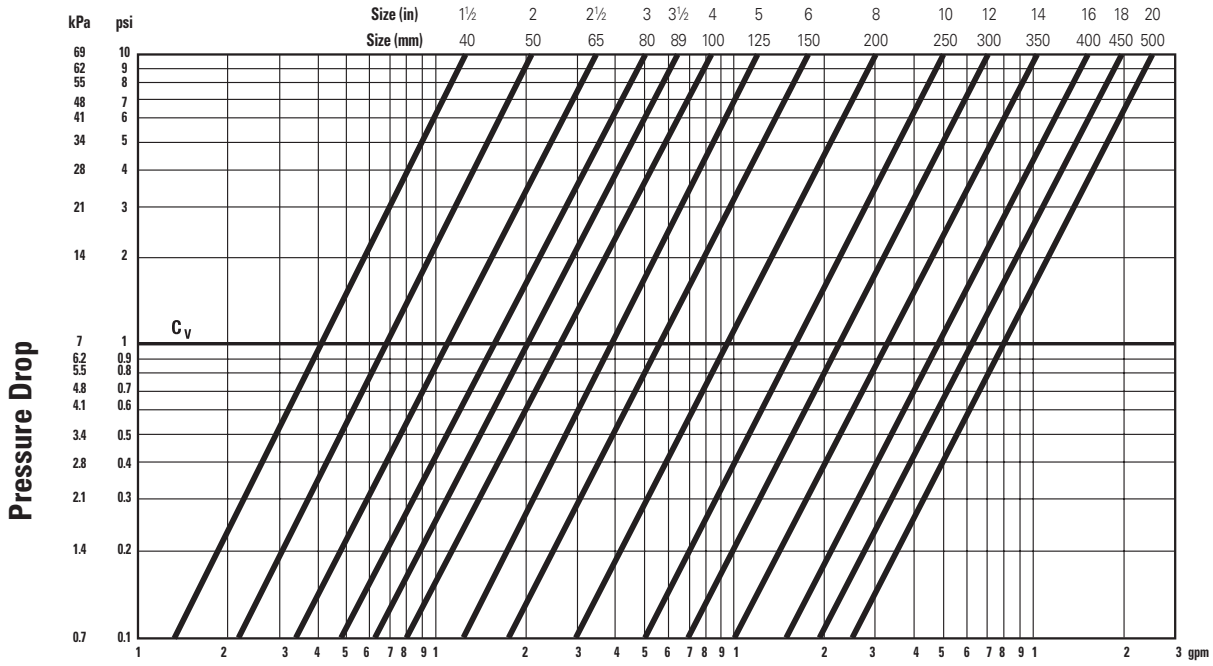


ES-F-710/715 0627

**Flow Rate**

Above based on flow of clean water through unplugged screens.
Some sizes listed on flow charts are not available from FEBCO.

## Flow-coefficient

The flow coefficient (Cv) is the number of gallons per minute of water flowing through a given size restriction at a pressure drop of one psi. To obtain the Cv factor for a given size strainer, read capacity at intersection with the one (1)psi pressure drop.

**Conversions:** For gpm to lpm, multiply by 3.8.
For psi to bar, multiply by .069


© 2009 FEBCO