Series 7001, 7002

UL/FM Fire Service Strainer

Sizes: 3" – 10" (80 – 250mm)

Features

- Epoxy coated fabricated steel strainer, flange x flange, groove x groove or groove x flange with single or dual cleanouts
- Large solids trap to minimize screen blockage
- 304 stainless steel strainer element

Pressure – Temperature

Maximum Working Pressure: 175psi (12.1 bar).

Water temperature up to 140˚F (60˚C)

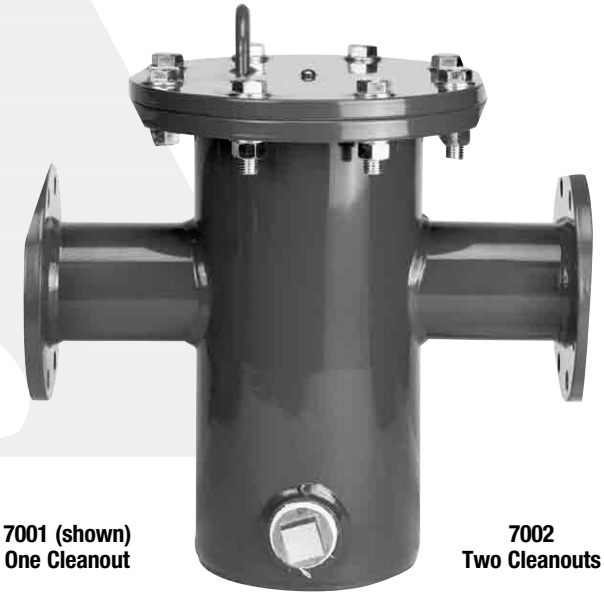

7001 (shown)
One Cleanout

7002
Two Cleanouts

Materials

Body & Cover: Fusion-bonded epoxy coated steel.

Screen: 304 stainless steel, .25 diameter perforation

Clean-Out Plug: Brass or Bronze

Flanges: AWWA Class “D”

Grooves: AWWA C606

Approvals

c UL us
Listed
321

FM
Approved
Class 5551

Series 7001, 7002 UL/FM Fire Service Strainer is used in conjunction with a water spray system to protect the system against clogging that can be caused by particles fouling the small discharge opening of the sprinkler heads. Strainers for fire systems are designed to trap foreign material 1/4" diameter or larger. This type of strainer is usually installed upstream of most of the devices in the system including the meters, backflow preventers (or detector check valves) and flow alarms, in order to protect these devices from damage caused by large particles.

Specifications

The strainer shall be designed to permit removal of the filter for replacement and repair without removing the body from the line. A flush outlet shall be provided with each strainer. The filter shall withstand 125psi (8.6 bar) when plugged. Friction loss shall not exceed 10psi (69 kPa) when tested with foreign materials (gravel) equal to 2 1/2' (762mm) of filled pipe trapped in the strainer. Open screen area shall be at least 6 times greater than the nominal pipe size open area. Friction loss shall not exceed 3psi (21 kPa) at rated flow when tested with clean filter and clean water. The strainer shall be an Ames Company Series 7001, 7002.

Job Name _____ Contractor _____

Job Location _____ Approval _____

Engineer _____ Contractor’s P.O. No. _____

Approval _____ Representative _____

Ames product specifications in U.S. customary units and metric are approximate and are provided for reference only. For precise measurements, please contact Ames Technical Service. Ames reserves the right to change or modify product design, construction, specifications, or materials without prior notice and without incurring any obligation to make such changes and modifications on Ames products previously or subsequently sold.

Series 7001, 7002

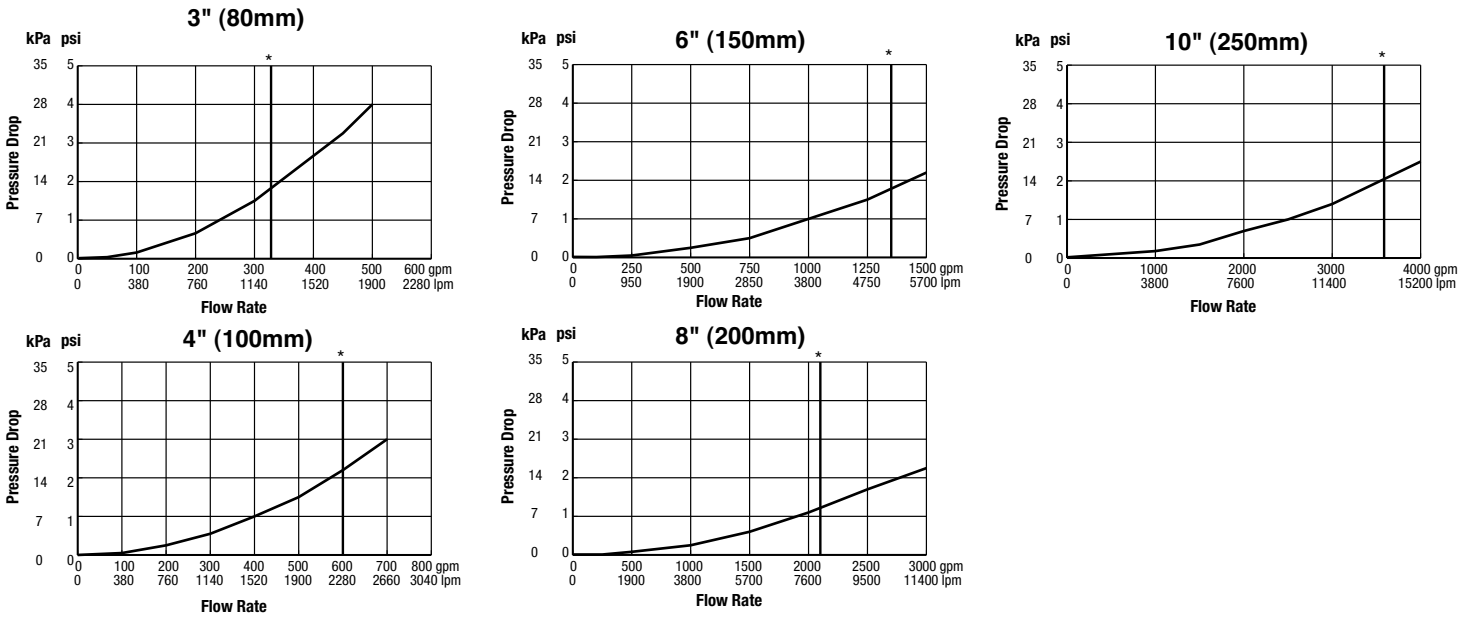

Dimensions – Weights

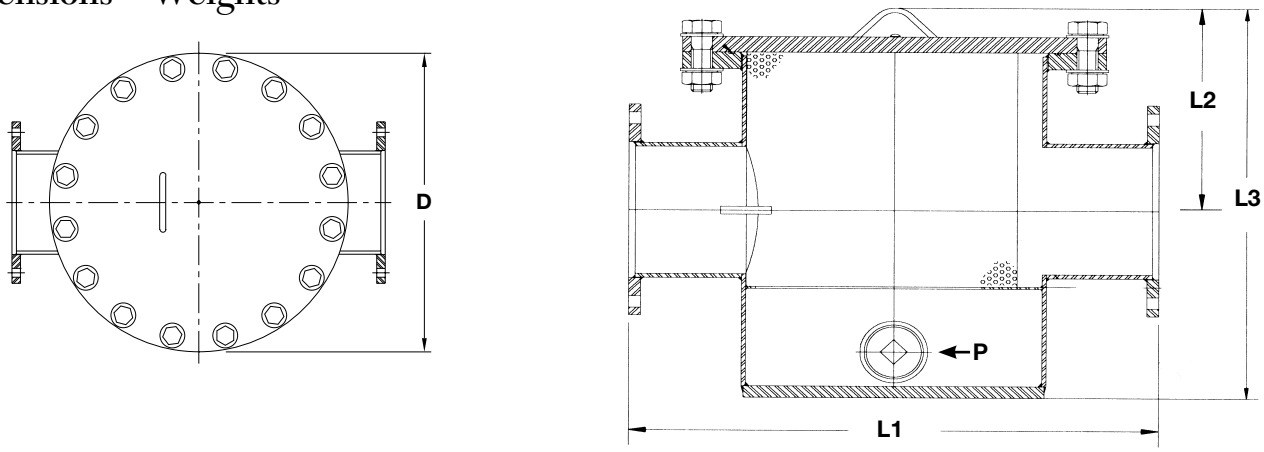

SIZE (DN)		DIMENSIONS															
		Nom Rated Flow		D		L1		L2		L3		P		STD Perf Dia		Shipping Weight	
in.	*mm*	*GPM*	*LPM*	*in.*	*mm*	*in.*	*mm*	*in.*	*mm*	*in.*	*mm*	*in.*	*mm*	*in.*	*mm*	*lbs.*	*kg*
3	80	325	1235	13½	343	14⅛	359	10	254	20⅝	524	2	51	¼	6.4	70	32
4	100	600	2280	13½	343	21	533	10⅝	270	20⅝	524	2	51	¼	6.4	120	54
6	150	1350	5130	19	483	26⅞	683	11¼	286	22⅜	568	3	76	¼	6.4	232	105
8	200	2100	7980	25	635	31¼	794	13	330	25⅛	637	3	76	¼	6.4	560	254
10	250	3600	13680	27½	699	30	762	14½	368	29⁵⁄₁₆	744	3 (x2)	76	¼	6.4	570	256

IMPORTANT: Inquire with governing authorities for local installation requirements.

AMES FIRE & WATERWORKS

www.amesfirewater.com

ISO 9001-2008 CERTIFIED

A Watts Water Technologies Company

USA: Backflow- Sacramento, CA • Tel: (916) 928-0123 • Fax: (916) 928-9333
Control Valves- Houston, TX • Tel: (713) 943-0688 • Fax: (713) 944-9445
Canada: Burlington, ON • Tel: (905) 332-4090 • Fax: (905) 332-7068

© 2011 Ames Fire & Waterworks