Series 1000DCV

Single Detector Check Valves

Sizes: 1½" – 2" (40 – 50mm)



2" 1000DCV (Flanged)

Features

- Horizontal or vertical installation
- Replaceable bronze seats
- Cast iron body and cover
- Valve is shipped fully assembled with optional bypass line including shutoff valve, meter and single check valve
- Low head loss

Models

FLG – Flanged end connections

THD – Threaded end connections

CFM – cubic feet per minute meter

GPM – gallons per minute meter

Pressure – Temperature

Maximum Working Pressure: 175psi (12 bars)

Temperature Range: 33˚F – 110˚F (5˚C – 43˚C)

Hydrostatic Test Range: 350psi (24 bars)

Materials

Body: Cast iron

Cover: Cast iron

Seats: Replaceable bronze

Series 1000DCV Single Detector Check Valves detect any leakage or unauthorized use of water from fire or automatic sprinkler systems. The valve also prevents the reverse flow of non-potable water from entering into the public mainline.

Specifications

A Detector Check Valve shall be installed where indicated on the plans to detect any leakage or unauthorized use of water from fire or automatic sprinkler lines. The valve shall also prevent the reverse flow of non-potable water from entering the public mainline. Valve shall have a cast iron body and cover and replaceable bronze seats. The valves shall be an Ames Company Series 1000DCV.

Job Name _____ Contractor _____

Job Location _____ Approval _____

Engineer _____ Contractor's P.O. No. _____

Approval _____ Representative _____

Ames product specifications in U.S. customary units and metric are approximate and are provided for reference only. For precise measurements, please contact Ames Technical Service. Ames reserves the right to change or modify product design, construction, specifications, or materials without prior notice and without incurring any obligation to make such changes and modifications on Ames products previously or subsequently sold.

Dimensions – Weights

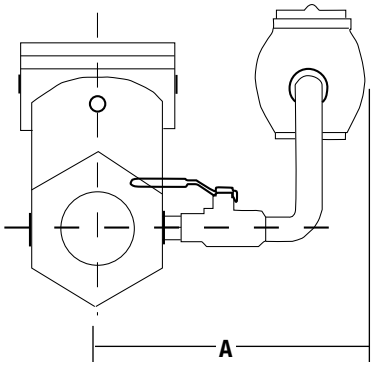

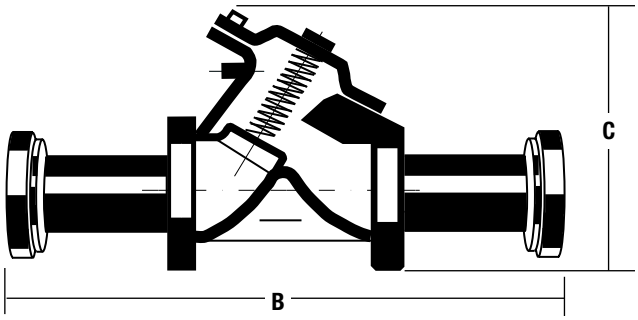

Size		Dimensions								With bypass Weight		Less bypass Weight	
		A		B (threaded)		B (flanged)		C					
in.	mm	in.	mm	in.	mm	in.	mm	in.	mm	lbs.	kg	lbs.	kg
1 1/2	40	10	254	17	432	17	432	7 1/2	191	43	19.5	30	13.6
2	50	10	254	17	432	17	432	7 1/2	191	43	19.5	30	13.6

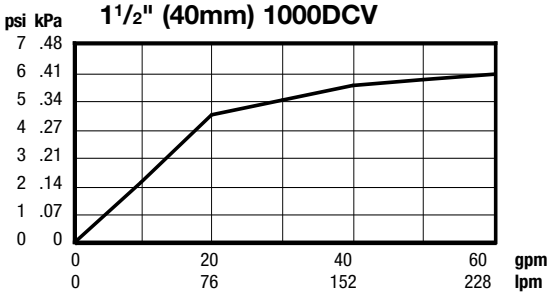

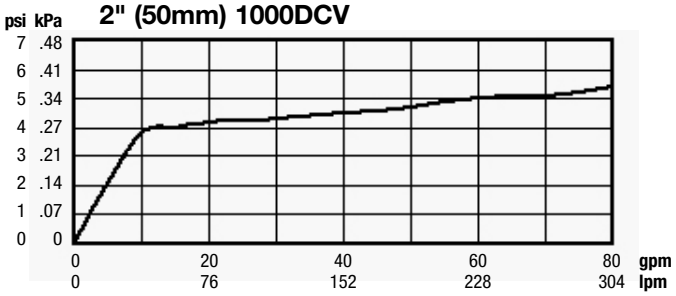

IMPORTANT: Inquire with governing authorities for local installation requirements.

© 2011 Ames Fire & Waterworks