INSTRUCTIONS

AIR-LOC ®
LINE STRINGER
PART NUMBER 301-000 (WITH REEL) 012-100 (FAN ASSEMBLY)

The Cherne Line Stringer threads a 1/8" tag line (cord) through the pipeline between manholes. The five horse-power gasoline engine and high-performance impeller create a vacuum that draws a high-velocity stream of air down the pipeline. This vacuum carries the parachute and attached cord from one manhole to the other.

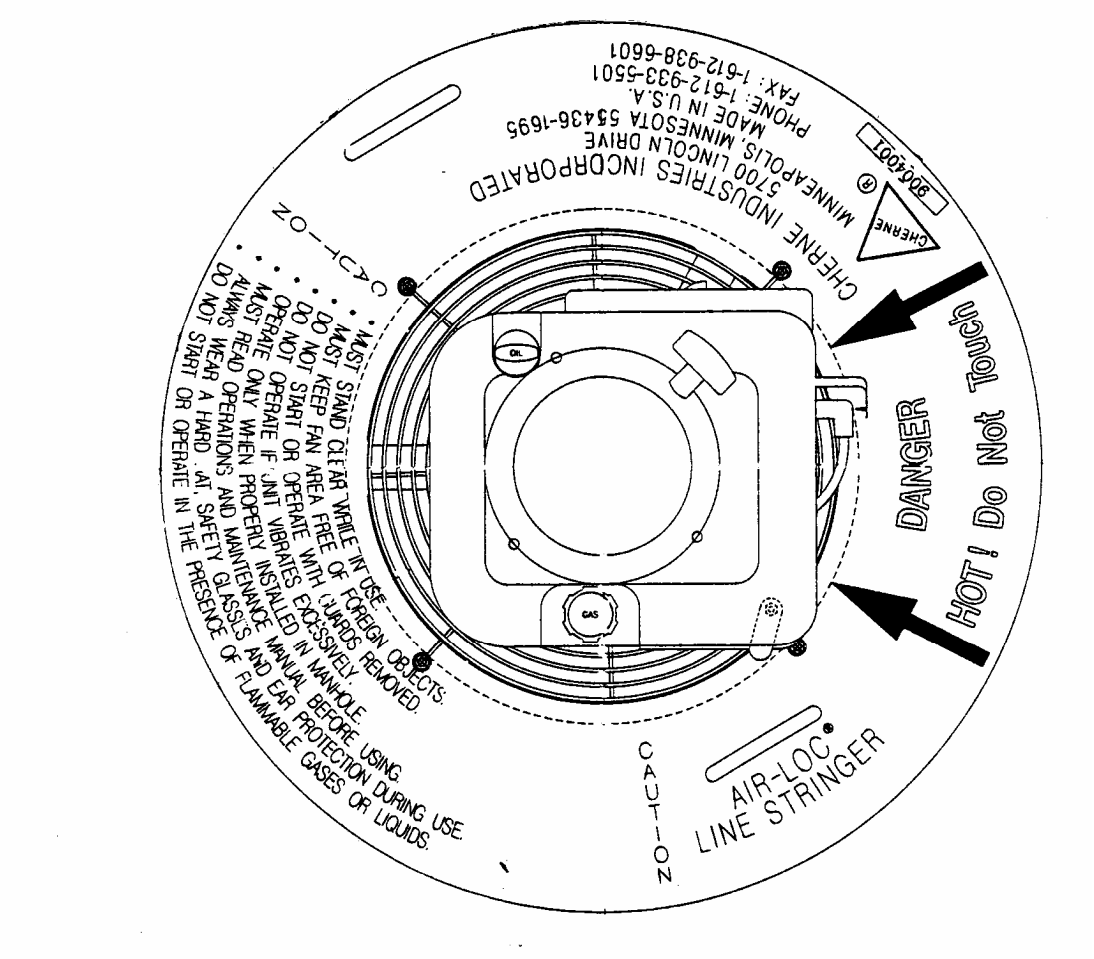

CHERNE INDUSTRIES INCORPORATED
5700 LINCOLN DRIVE
MINNEAPOLIS, MN 55436-1695
FAX: 1-800-843-7585 Local: (612) 938-6601

1-800-THE-PLUG
(1-800-843-7584)
(612) 933-5501

TABLE OF CONTENTS

Unpacking ..... Page 2

Packing List ..... Page 2

Warning ..... Page 2

Caution ..... Page 3

Description ..... Page 4

Safety ..... Page 4

Installation & Operation ..... Page 5

Line Stringer Parts List ..... Page 6

Reel Parts List ..... Page 8

Converting Line Stringer To A Blower ..... Page 9

Maintenance ..... Page 10

Manhole Safety Procedures ..... Page 11

Limited Warranty ..... Page 12

UNPACKING

Inspect this product immediately upon receipt. If you find damage, notify the delivering carrier immediately to begin the claims process. Carriers have the right to refuse claims for damage if they are not notified immediately.

PACKING LIST

Take care when unpacking that all items are accounted for and that nothing is discarded with the packaging.

Part Number	Description
120-200	Line Stringer Parachute
300-608	Reel (Optional)

WARNING!

Test manholes for gases **before** using the Cherne Line Stringer. If toxic or flammable gases are present, ventilate the manhole. Gases can cause injury, asphyxiation, and death! If the sewer system has hazardous gases from sewage or solvents, the Line Stringer may draw them into the manhole during operation. If you plan on entering the manhole after the line stringing operation, test again for gases.

!!CAUTION!!

ENGINE IS SHIPPED WITHOUT OIL!

FILL ENGINE WITH OIL TO LEVEL INDICATED ON DIPSTICK BEFORE ATTEMPTING TO START ENGINE!

FAILURE TO FILL ENGINE WITH OIL BEFORE STARTING ENGINE WILL RESULT IN ENGINE FAILURE AND VOID THE WARRANTY!!

!!CAUTION!!

TURN FUEL SUPPLY VALVE TO "OFF" POSITION BEFORE TRANSPORTING UNIT.

VIBRATION DURING TRANSPORT MAY CAUSE FUEL TO DRAIN INTO ENGINE CYLINDER & CRANKCASE. THIS MAY DAMAGE ENGINE DUE TO IMPROPER LUBRICATION OR CAUSE DAMAGE TO ENGINE COMPONENTS DUE TO AN OVERFILLED CRANKCASE OR ENGINE CYLINDER.

DESCRIPTION

THE HOUSING: A light-weight, corrosion-resistant, cast aluminum housing locates the Line Stringer over the man hole. The housing provides a sturdy platform for the engine and seals the manhole opening. The impeller area is totally enclosed by wire guards, preventing entry of large objects or debris and providing personal protection from the rotating impeller.

The two top-mounted handles allow easy handling. A 1/2"-thick foam pad attached to the underside of the flange minimizes noise and vibration and prevents excess movement of the unit during operation.

THE ENGINE: The five horse-power gasoline engine is equipped with a convenient vertical pull recoil starter and a top-mounted oil fill/dipstick.

THE IMPELLER: The 16-inch diameter impeller is of a high-performance design and can produce -- at the maximum-rated engine speed -- a free air flow of over 4000 cubic feet per minute.

The impeller is a two-piece cast aluminum assembly and 10 chemical-resistant polypropylene airfoil-style blades. This assembly in turn is attached to a cast aluminum hub.

SAFETY

1. Observe all state and federal regulations if the manhole is entered. Also follow Cherne's instruction *Safety Procedures for Entrance into Manholes or Confined Spaces* (Appendix).

2. Stand clear after starting the unit. The high velocity air leaving the manhole through the Line Stringer may pick up, accelerate, and discharge dirt and debris that could injure the operator.

3. Do not operate the Line Stringer with the guards removed or loose. The guards protect operators from the rotating impeller. The guards also aid in preventing objects and debris from entering the impeller area.

4. Do not operate the Line Stringer over an occupied manhole. The high-velocity air moving through the manhole may pick up and accelerate dirt and debris that could cause injury. The Line Stringer may also draw toxic or flammable gases to the manhole that were previously undetected.

5. Keep the impeller area free of foreign objects and debris -- they could cause severe damage, given the high rotating speeds and small clearance between the impeller and housing.

6. Do not operate the Line Stringer if it vibrates excessively. The impeller assembly is well-balanced. The only vibration should be what is typical for a small gasoline engine. Any unusual vibration indicates a potentially serious and dangerous problem.

7. Never operate the Line Stringer unless it is properly installed in a manhole. Operation under any other condition could cause an unstable platform, excess vibration, and entry of debris into the Line Stringer.

8. Always wear a safety hat, safety glasses, and ear protection when working in sewers, manholes, and while operating the Line Stringer.

9. Do not operate the Line Stringer in the presence of gases or liquids that are flammable or toxic. This unit is capable of moving large volumes of air and gas from other locations in'the sewer system. The engine can ignite flammable gases and liquids.

10. Make frequent checks for loose fasteners before, during, and after operation.

11. Follow all instructions and warnings provided by the engine manufacturer regarding safety, operation, and maintenance.

INSTALLATION AND OPERATION

1. Remove the covers from the two manholes adjacent to the pipeline to be strung. Observe all safety requirements regarding manholes, sewer systems, and operation of the Line Stringer.

2. Place the Line Stringer in the desired manhole.

3. Place the reel assembly next to the second manhole. Attach the parachute to the cord on the reel using the attached snap.

4. Start the engine following the engine manufacturer's instructions (Note: the throttle has been preset in the proper position).

5. Put the parachute in the pipeline. The preferred method is to dangle the parachute in front of the pipeline opening from atop the manhole. Another method is to physically enter the manhole with the parachute. Observe all safety requirements if the manhole is entered.

6. Attend the cord reel while stringing, ensuring the reel remains in position and the cord unreels smoothly and rapidly. **CAUTION!! The reel may spin rapidly when line is being threaded. It is important to wear gloves to prevent rope burn or other injury to hands.** When the parachute reaches the manhole with the Line Stringer, the parachute and cord will stop abruptly -- stop the reel immediately to prevent the unreeling of excess cord (backlash).

7. Stop the Line Stringer engine by grounding the spark plug with the installed grounding strap.

8. Remove the Line Stringer from the manhole. Retrieve the parachute using a long hook from atop the manhole. A less preferred method is to physically enter the manhole. Observe all safety requirements if the manhole is entered.

9. Detach the parachute from the cord and attach cord to the line (i.e. rope, cable, hose, etc.) to be strung.

10. Rewind the 1/8" cord onto the reel, pulling the line to be strung through the pipe.

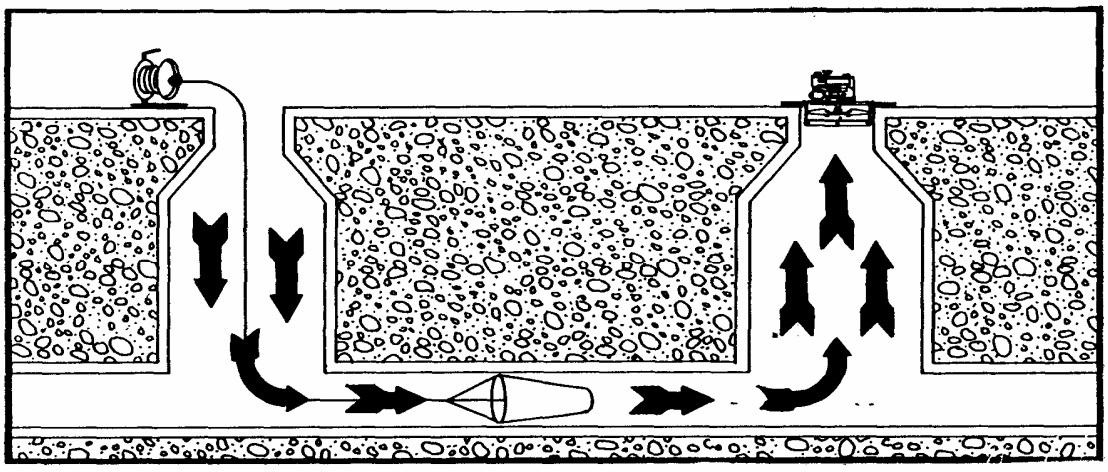

LINE STRINGER PARTS LIST

(Refer to drawing on page 7)

ITEM	QUANTITY	PART NO.	DESCRIPTION
1	1	120-030	Housing
2	1	120-049	Top Guard
3	4	008-032	Stud, Threaded, 1/4-20UNC x 1.50 LG
4	4	000-027	Flat Washer (1/4")
5	2	120-243	Handles
6	4	120-286	Pan Head Screws (10-32 x 3/4" Long)
7	.05	015-814	Thread Locking Compound
8	1	011-068	Engine
9	2	000-469	MHH Bolts (5/16-18UNC x 2)
10	3	000-930	Self-Locking Nuts (5/16-18UNC)
11	1	292-656	Key-Square, 3/16 x 3/16 x 1.00
12	1	014-714	Impeller
13	1	120-057	Bottom Guard
14	4	037-338	Self-Locking Nuts (1/4-20UNC)
15	4	120-294	Pan Head Screws (1/4-20 x V)
17	1	019-175	Bolt-MHH, 3/8-24 x 1
18	.003	022-861	Contact Cement
19	1	000-434	Bolt-MHH, 5/16-18UNC x 3"
20	4	120-010	Foam Pads
25	1	016-140	Screw, #6 x 1/2 Sheet Metal-Hex Hd
26	4	008-040	Nut, Serrated Flange, 1/4-20 UNC
28	1	011-288	Hub, Welded
29	2	001-252	Screw, Set 1/4-20 UNC x 5/16
30	4	000-159	Washer, 3/8 Lock
31	3	000-507	Bolt, MHH 3/8-16UNC x 1.00
32	1	005-898	Label, Bar Code
33	1	091-510	Oil, 1 Qt-30 Wt Bottle W/Cap

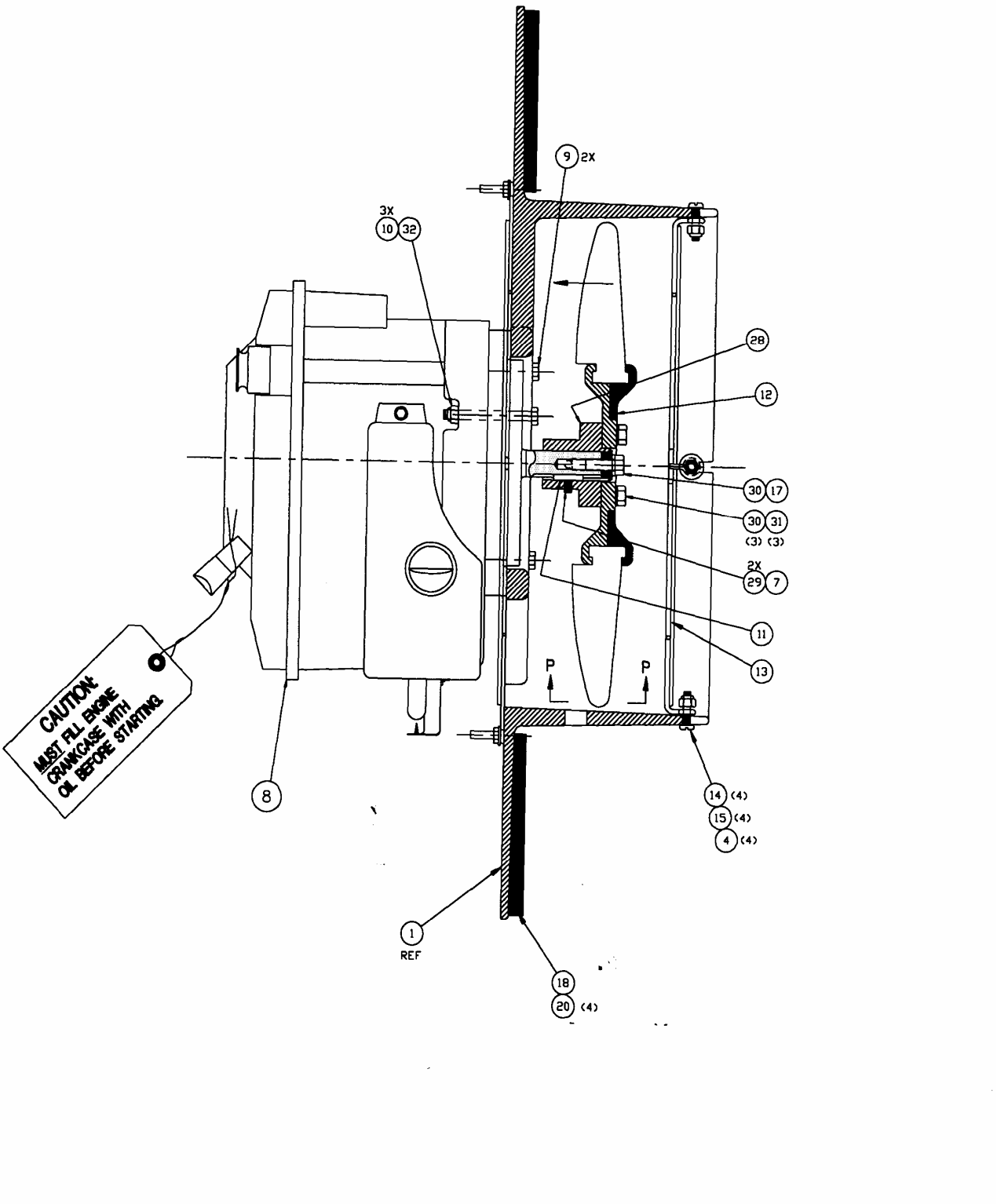
9 2X
3X
10 32
28
12
30 17
30 31
(3) (3)
2X
29 7
11
13
P
P
CAUTION:
MUST FILL ENGINE
CRANKCASE WITH
OIL BEFORE STARTING.
8
14 (4)
15 (4)
4 (4)
1
REF
18
20 (4)

300-802, REV J

REEL PARTS LIST

ITEM	QUANTITY	PART NO.	DESCRIPTION
1	1	017-337	Reel
2	1000 ft.	300-586	1/8" Cord (Solid-Braid Nylon Line)
3	1	121-029	Spring Snap (0929T12)

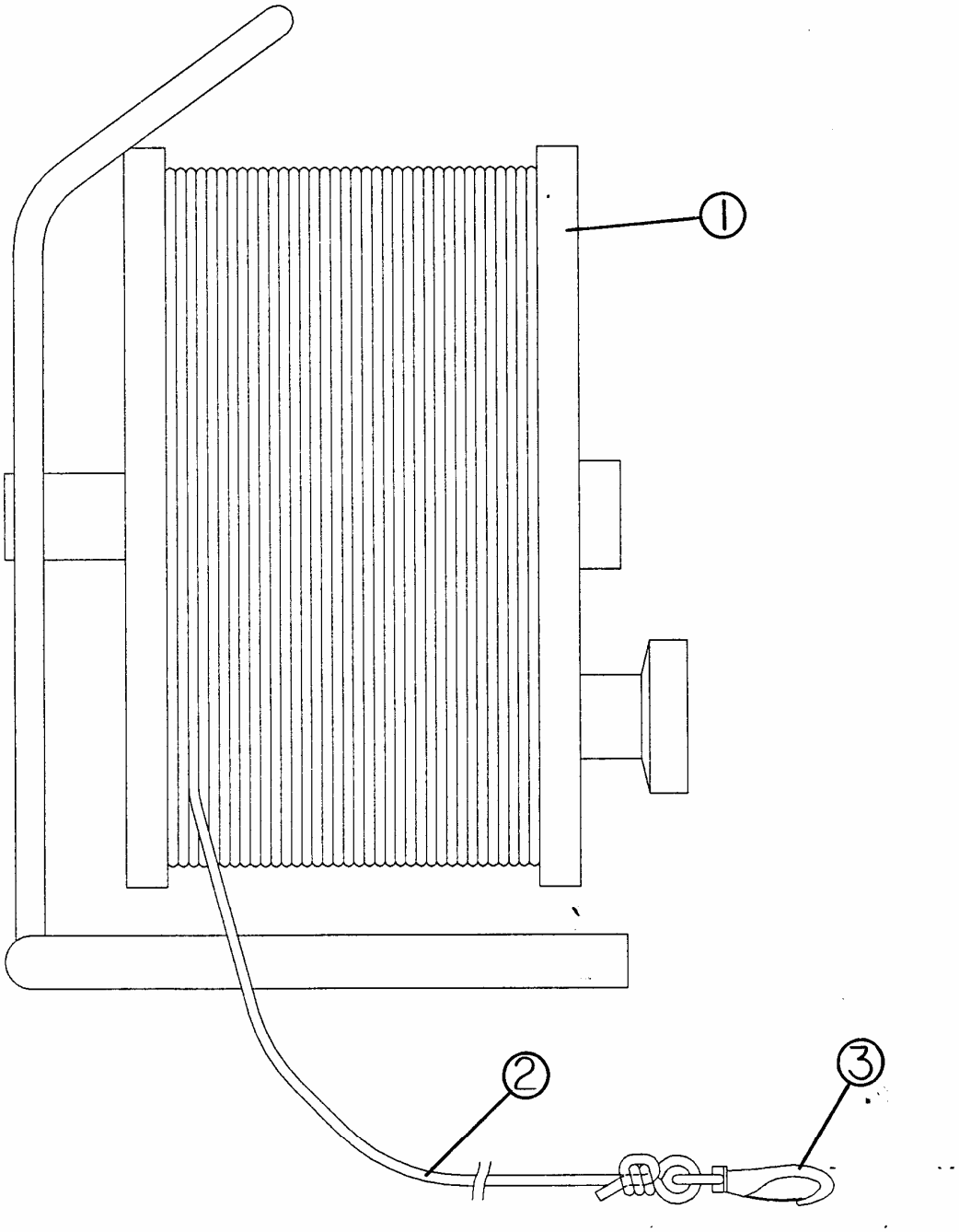

CONVERTING LINE STRINGER TO A BLOWER

The Line Stringer assembly is a multi purpose unit. It can be converted to a blower for use as a ventilator or in smoke testing applications. This conversion is done by simply changing the impeller. A new smoke blower impeller can be ordered directly from Cherne Industries Incorporated by requesting part no. 014-722.

Once you have acquired the new impeller, follow the Impeller Removal and Installation instructions below to properly change impellers.

IMPELLER REMOVAL AND INSTALLATION

1. **Remove the spark plug wire from the spark plug and attach it to the retaining post.**
2. Remove the three 3/8" impeller retaining bolts using a 9/16" wrench. **DO NOT** remove the center bolt. (See FIGURE 1).
3. Remove the impeller from the hub.

NOTE: Steps 4-7 are for Hub installation *only*.

4. Remove the old hub from the shaft and slide the new one on the engine shaft.
5. Slide the Key-square (item 11) into place on the shaft and inside the hub.
6. Install lock washer and center bolt (items 30 and 17) into the end of the engine shaft. Make sure to put thread locking compound on the bolt threads.
7. Slide the hub down until it's butted against the bushing, and tighten the hub to the shaft with the (2) set screws (item 29).
8. Prior to installing the new impeller, make sure that the fan blade orientation matches that of view A-A below for smoke blowing operations.
9. Install the new impeller on the hub using the 3/8" retaining bolts that were previously removed. Be sure to tighten the bolts before operating.

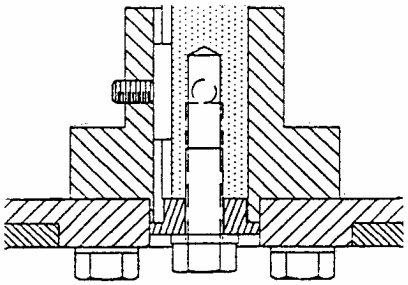

FIGURE 1

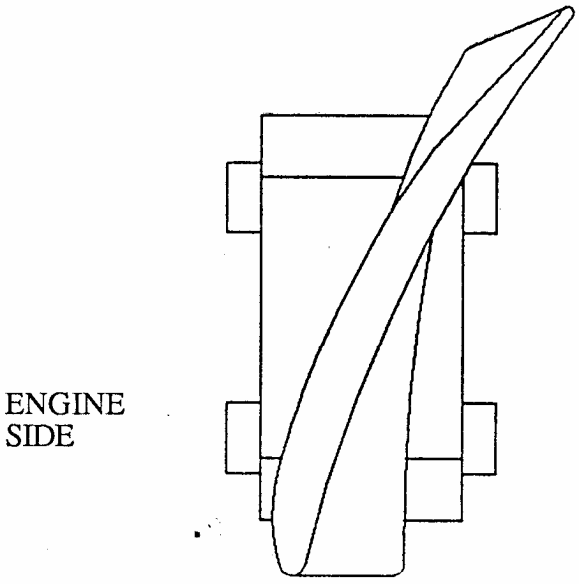

VIEW A-A
MOUNT FAN WITH BLADE
ORIENTATION AS SHOWN

MAINTENANCE

ENGINE

Follow the engine manufacturer's instructions with the following exceptions and additions:

1. When changing or draining the oil using the normal method (through the bottom drain), it will be necessary to remove the lower guard and impeller.

   a. Remove the guard from the housing by loosening the four attaching bolts and pulling the guard downward.

   b. Remove and install the impeller (see below, under "Impeller")

   c. When reinstalling the lower guard, ensure that the proper self-locking nuts are used and that all fasteners are tightened securely.

2. An alternate method for changing or draining the engine oil:

   a. Drain all fuel from the engine tank and carburetor.

   b. Remove the oil cap and dipstick.

   c. Slowly drain the engine oil out through the oil fill tube by carefully tilting the Line Stringer and engine assembly towards the oil fill opening. Care should be taken to ensure all oil flows from the oil pump to the corner of the engine under the fill tube and then up and out through the fill tube.

FASTENERS

Make frequent checks of all fasteners. When performing maintenance, ensure fasteners are properly installed using self-locking nuts and thread-locking compound. The vibrations associated with small gas engines make fasteners prone to loosening.

The Cherne Line Stringer uses a combination of self-locking nuts and thread-locking compound on all fasteners to minimize this problem.

MANHOLE SAFETY PROCEDURE

RECOMMENDED SAFETY PROCEDURE FOR ENTRANCE INTO MANHOLES OR CONFINED SPACES

WARNING: THESE RECOMMENDATIONS ARE TO BE USED AS A GENERAL GUIDELINE ONLY. ALTHOUGH CBERNE RECOMMENDS THESE FOLLOWING GUIDELINES, IT DOES NOT WARRANT, REPRESENT OR ASSUME ANY RESPONSIBILITY THAT THESE RECOMMENDATIONS WILL FULFILL ALL APPLICABLE FEDERAL, STATE OR LOCAL REQUIREMENTS. CHERNE ASSUMES NO LIABILITY FOR EITHER PERSONAL INJURY OR CONSEQUENTIAL DAMAGES THAT RESULT FROM THE RELIANCE ON THESE RECOMMENDATIONS.

WARNING: IT IS THE PRODUCT USER'S RESPONSIBILITY TO READ AND COMPLY WITH ALL APPLICABLE REGULATIONS. REFER TO THE *CODE OF FEDERAL REGULATIONS, "CFR" PART 1926* AND ALL OTHER PERTINENT FEDERAL, STATE AND LOCAL REGULATIONS.

ALWAYS OUTFIT YOURSELF WITH THE NECESSARY SAFETY EQUIPMENT FOR ENTRANCE INTO A MANHOLE OR CONFINED SPACE. THIS MAY INCLUDE, BUT NOT BE LIN41TED TO, THE FOLLOWING ITEMS (REFER TO WARNING STATED IMMEDIATELY ABOVE):

Recommended equipment is as follows:

A. Safety Hat
B . Safety Glasses
C. Respirator or Self-Contained Air Source
D. Safety Harness, Ropes, and Winching System
E. Safety Shoes or Boots
F . Protective Gloves
G . Ear Protection
H. Hazardous Gas Detector and Oxygen Monitor
1. Manhole or Confined Space Ventilation
J. Protective Clothing
K . Safety Ladders
L. Any Other Recommended or Required Equipment

ALWAYS ENSURE THAT ALL EQUIPMENT MEETS OR EXCEEDS THE MINIMUM REQUIREMENTS OF ALL APPLICABLE REGULATORY GUIDELINES. ALL EQUIPMENT SHOULD BE PROPERLY MAINTAINED, STORED, CALIBRATED IF NECESSARY, AND INSPECTED PRIOR TO EACH USE, IN COMPLIANCE WITH APPLICABLE REGULATIONS AND EQUIPMENT MANUFACTURER RECOMMENDATIONS.

ALWAYS PROPERLY VENTILATE MANHOLE OR CONFINED SPACE BEFORE ENTERING AND MAINTAIN VENTILATION WHILE IN MANHOLE OR CONFINED SPACE.

ALWAYS THOROUGHLY CHECK AT ALL LEVELS FOR HAZARDOUS GASES AND PROPER OXYGEN LEVELS (20 % MINIMUM). CONTINUOUSLY MONITOR THESE LEVELS WHEN WORKERS ARE IN THE MANHOLE.

NEVER ENTER A MANHOLE OR CONFINED SPACE WITHOUT CO-WORKER ASSISTANCE. CO-WORKERS MUST BE PROPERLY TRAINED IN SAFETY REQUIREMENTS FOR ACCESS TO MANHOLES OR CONFINED SPACES.

IF YOU ENCOUNTER OR OBSERVE ANY CONDITIONS THAT ARE NOT EXPLAINED HERE OR NOT FULLY UNDERSTOOD BY YOU, NOTIFY YOUR SUPERVISOR OR SAFETY DIRECTOR BEFORE PROCEEDING.

!!DANGER!!

ALWAYS CONSULT WITH PROPER STATE, LOCAL, AND FEDERAL AGENCIES TO INSURE THAT ALL REQUIRED REGULATIONS ARE BEING FULFILLED.

FAILURE TO COMPLY WITH PROPER SAFETY REGULATIONS MAY RESULT IN SERIOUS BODILY INJURY OR DEATH!!

LIMITED WARRANTY

Manufacturer warrants all products manufactured by it will be free from defects in material and workmanship for one (1) year following the date of manufacture. If any of the goods are found to be defective, such goods will, at manufacturer's option be replaced or repaired at manufacturer's cost. The parties hereto expressly agree that buyer's sole and exclusive remedy against the manufacturer shall be for the repair or replacement of defective goods as provided herein. (The sole purpose of the stipulated exclusive remedy shall be to provide the buyer with free repair and replacement of defective goods in the manner provided herein. The exclusive remedy shall not be deemed to have failed of its essential purpose so long as the manufacturer is willing and able to repair or replace defective goods in the prescribed manner.) Goods which may be sold by manufacturer but are not manufactured by it are not warranted by manufacturer, but are sold only with the warranties, if any, of the original manufacturers thereof. (This warranty does not cover labor or other costs or expenses to remove or install any defective, repaired or replaced goods.) Manufacturer's warranty does not apply to any goods which have been subjected to misuse, mishandling, misapplication, neglect (including but not limited to use of unauthorized parts or attachments), or adjustment or repair performed by anyone other than manufacturer or one of manufacturer's authorized agents.

Any claim by buyer with reference to the goods sold hereunder shall be deemed waived by the buyer unless submitted in writing to manufacturer within the earlier of (1) thirty (30) days following the date buyer discovered or by reasonable inspection should have discovered, any claimed breach of the foregoing warranty, or (2) thirteen (13) months following the date of manufacture. Any cause of action for breach of the foregoing warranty shall be brought within one year from the date the alleged breach was discovered or should have been discovered, whichever comes first.

LIMITATION OF LIABILITY. Manufacturer's liability (whether under the theories of breach of contract or warranty, negligence, or strict liability) for its goods shall be limited to repairing or replacing parts found by the manufacturer to be defective, or at manufacturer's option, to refunding the purchase price of such goods or parts thereof.

DISCLAIMER OF CONSEQUENTIAL DAMAGES. In no event shall manufacturer be liable for consequential damages arising out of or in connection with this agreement, including without limitation breach of any obligation imposed on manufacturer hereunder or in connection herewith. Consequential damages for purposes hereof shall include, without limitation (including death) to any person, or loss of or damage to property (including without limitation property handled or processed by the use of goods). Buyer shall indemnify manufacturer against all liability, cost or expense which may be sustained by manufacturer on account of any such loss, damage or injury.

DEFECTIVE PRODUCTS POLICY. To obtain performance under this warranty, any product suspected of having a manufacturing defect in materials or workmanship at manufacturers request must be returned to CHERNE INDUSTRIES INCORPORATED, freight prepaid, for inspection. A returned goods authorization must be obtained before shipping any product back to CHERNE. Call 1-800-843-7584 and ask for customer service.

CUSTOMER TRANSPORTATION REIMBURSEMENT. Whenever CHERNE repairs or replaces a product at CHERNE'S expense CHERNE will reimburse the distributor by credit memo, the same surface freight amount it cost CHERNE to return the warranty items.

The foregoing warranty is in lieu of all other warranties express or implied,, including those of merchantability or fitness for any purpose not expressly set forth herein. No affirmation of manufacturer, by words or action, other than as set forth in this language shall constitute a warranty.

Form 300-802, Rev. K
©1996 Cherne Industries Incorporated
All Rights Reserved