NIBCO INC.
WORLD HEADQUARTERS
1516 MIDDLEBURY ST.
ELKHART, IN 46516-4740
USA
PHONE: 574.295.3000
FAX: 574.295.3307
WEB: www.nibco.com

INSTALLATION, OPERATION & MAINTENANCE INSTRUCTIONS

Review Date: 01/18/2012
Original Date: NA

Installation and Operation Instructions for NIBCO® Circuit Balancing Valves (Model T/S-1710)

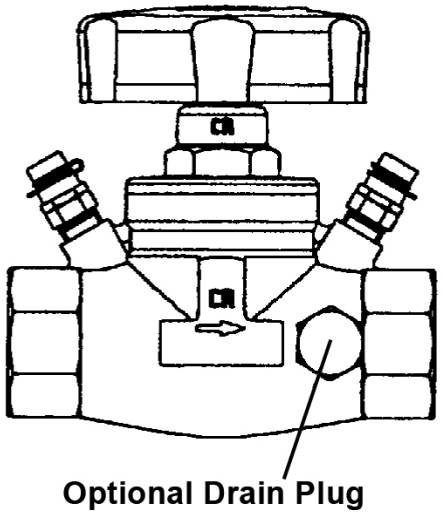

PRESSURE/TEMPERATURE RATING

The Figure 1710 is suitable for 290 psi pressure rating. It must be installed in a piping system, where the normal pressure does not exceed this rating. The maximum temperature is restricted to 250°F.

SITING

Conventionally, valves and commissioning sets are installed in horizontal pipework. This is, however, not a constraint and they may be mounted in vertical or inclined pipework, inverted or rotated to clear walls, ceilings and other restrictions.

INSTALLATION

Unpack the valve and check that the bores are clean and free from foreign material. Also check that the adjoining pipework is clean and free from debris and burrs.

Confirm that the pipe threading length is correct to avoid excessive penetration of the pipe into the valve which may otherwise cause damage.

Sealing compound may be used but excessive use of hemp type materials should be avoided which increases the thread interference and may cause overstressing of the body ends.

CAUTION: Only qualified personnel should undertake the procedures outlined in this document. NIBCO INC., its agents, representatives and employees assumes no liability for the use of these procedures. These procedures are offered as suggestions only.

This valve is a combined regulating and flow measurement device and must be installed with five diameters of straight pipe of the same diameter as the valve without intrusion upstream of the valve. Three diameters of straight pipe are required on the valve outlet.

The valve must be installed with the direction arrow on the body coincident with the direction of flow in the pipeline.

Care is needed during installation to provide free access to enable the valve to be fully operated, regulated and set in the required position. Care should be taken regarding the orientation of the test points to give sufficient room for the manometer probe connection.

NOTE: If vent/drain plugs are provided, careful consideration is necessary during installation to ensure they may be utilized effectively.

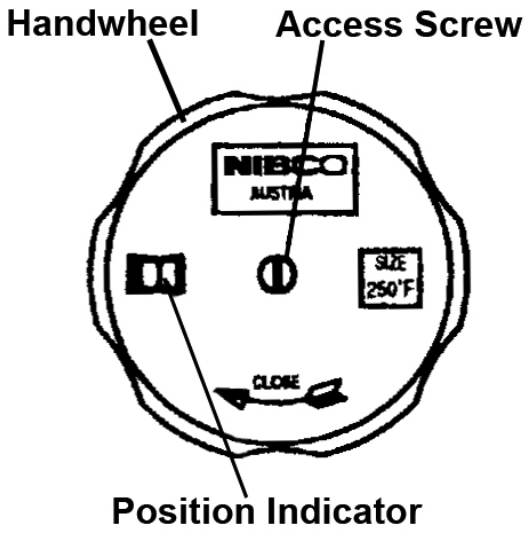

OPERATION

When used for the balancing of water distribution systems, valves should always be in the fully open positions at the commencement of any commissioning or flushing exercise.

Regulation is accomplished by rotating the handwheel clockwise. The disk position corresponds with the decimal indicator viewed through the display window. The closed position has a decimal indicator reading 0-0.

VALVE SETTING

When the regulated position is achieved, the double regulating feature is set as follows:

1. Remove the access screw; do not remove the handwheel.
2. Regulate the inner stem clockwise (using a thin blade screwdriver) until a stop is felt. The regulated memory position is now set.
3. Refit the access screw.

CLOSED POSITION 0-0 SETTING

If for any reason the valve closed position reads other than 0-0, the following procedure should be followed:

1. Operate the valve to the closed position.
2. Remove the access screw.
3. Remove the handwheel.
4. Twist the handwheel baseplate and handwheel grip until the decimal indicator displays 0-0, then refit the complete handwheel assembly onto the valve stem.
5. Refit the access screw.
6. Open and close the valve to confirm that the valve indicates 0-0 at the closed position.

Figure S1710 Solder End Balancing Valve - Installation Instructions

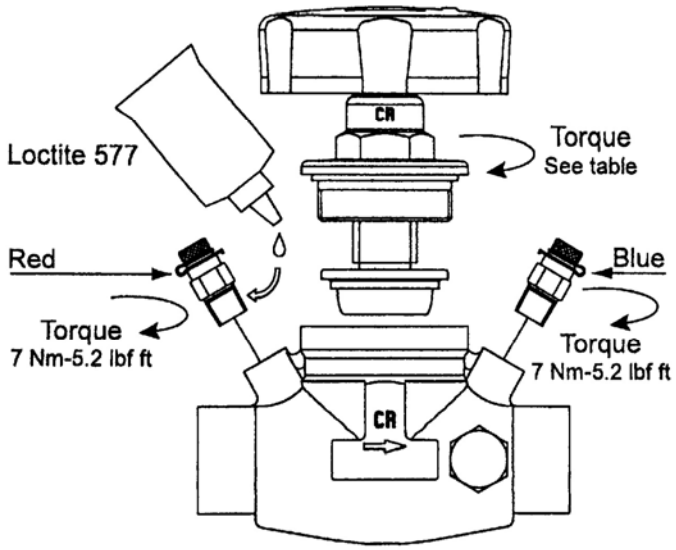

1. Unscrew the bonnnet from the valve body to protect parts and seals
2. Solder valve into pipework using solder type 95/5 (95% tin, 5% antimony or silver)
3. Screw the bonnet into body and tighten with the torque shown in table.
4. Apply Loctite 577 to test points and screw into body and tighten to a maximum torque of 7 Nm - 5.2 lbf ft.

Size	Torque	Torque
1/2"	35 Nm	26 lbf ft
3/4"	40 Nm	30 lbf ft
1"	65 Nm	48 lbf ft

Size	Torque	Torque
1 1/4"	75 Nm	55 lbf ft
1 1/2"	90 Nm	66 lbf ft
2"	200 Nm	147 lbf ft

INSTALLATION GUIDELINES

