NIBCO® Coil-Connect™ Kit

NCC1S - Solder

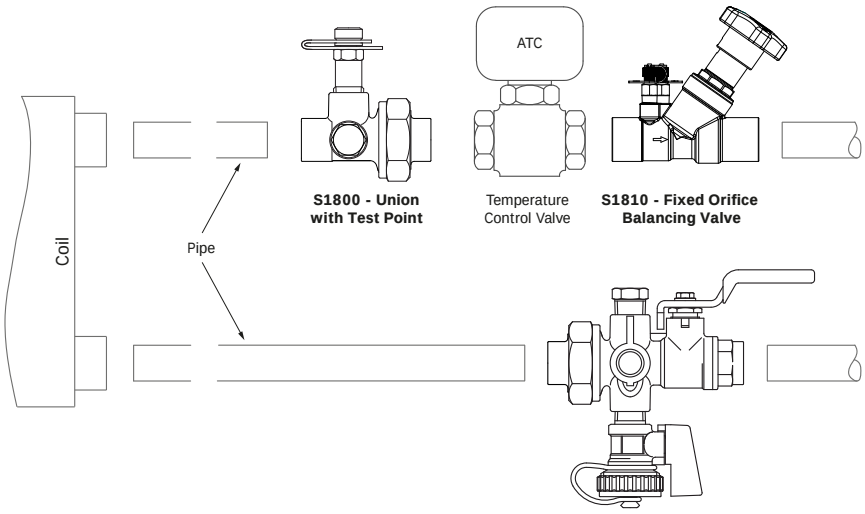

NOTE: ATC supplied by others

Available in sizes ½″ to 2″

Modified	Date							
	Ref. No.							
Designed		Scale			Date	08/30/2012		
Checked		Description						
Approved		NIBCO NCC1S Coil Kit with Union, Fixed Orifice Balancing Valve and Combination Ball Valve with Drain						
NIBCO AHEAD OF THE FLOW®		Code NIBCO					Prod. Code NCC1S	

The information contained in this document is the confidential property of NIBCO INC. It may not be used reproduced or otherwise made use of other than for the purpose for which it was issed by NIBCO INC.

NCC1T - Threaded

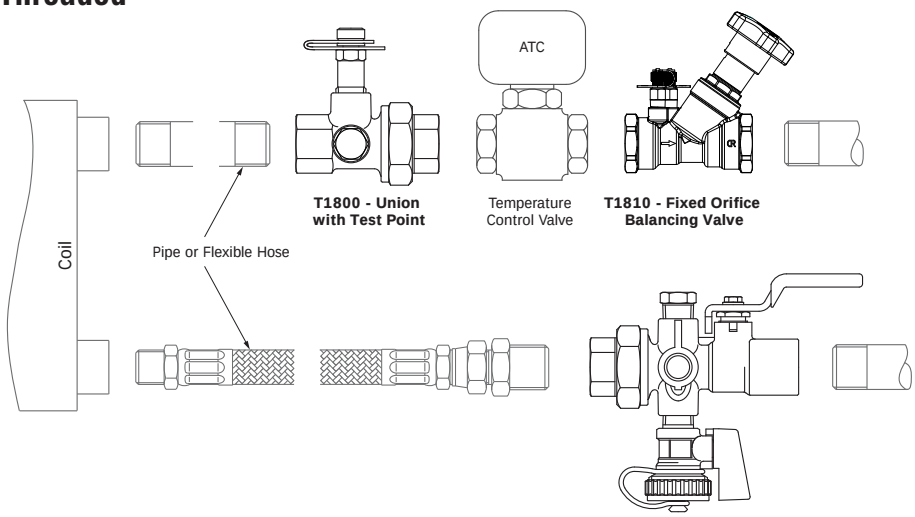

NOTE: ATC supplied by others
Flexible Hose supplied as an accessory

Available in sizes ½″ to 2″

Modified	Date							
	Ref. No.							
Designed		Scale			Date	08/30/2012		
Checked		Description						
Approved		NIBCO NCC1T Coil Kit with Union, Fixed Orifice Balancing Valve and Combination Ball Valve with Drain						
NIBCO AHEAD OF THE FLOW®		Code NIBCO					Prod. Code NCC1T	

The information contained in this document is the confidential property of NIBCO INC. It may not be used reproduced or otherwise made use of other than for the purpose for which it was issed by NIBCO INC.