NIBCO
AHEAD OF THE FLOW

CIRCUIT BALANCING VALVES

T and S1710

APPLICATIONS

- Globe style balancing valve for use in HVAC and plumbing systems
- Balanced system ensures a comfortable indoor climate
- Balancing valves provide desired flow distribution throughout the system
- Optimum system performance provides energy and cost efficiencies.

MATERIALS & CONSTRUCTION

- Dezincification resistant brass body, bonnet and trim
- Two integral test ports
- Memory stop feature
- Position display window on handwheel

DESIGN CRITERIA

- ANSI B1.20.1 (NPT ends)
- ANSI B16.18 (Solder ends)



S1710

Dezincification Resistant



T1710

Unique features of the NIBCO 1710 straight pattern globe gives improved flow measurement accuracy and lower head loss characteristics compared to "Y" pattern globes.

DZR Brass Circuit Balancing Valves

Straight Pattern Globe • Non-Rising Stem Design • Fitted with 2 Test Points for Differential Pressure Measurement • Integral Internal Memory Stop

Rated 240psi to 250°F

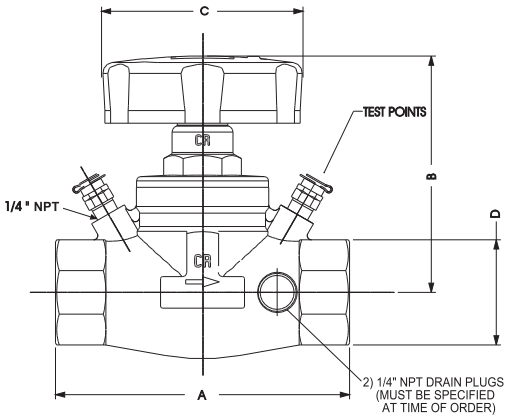

T1710

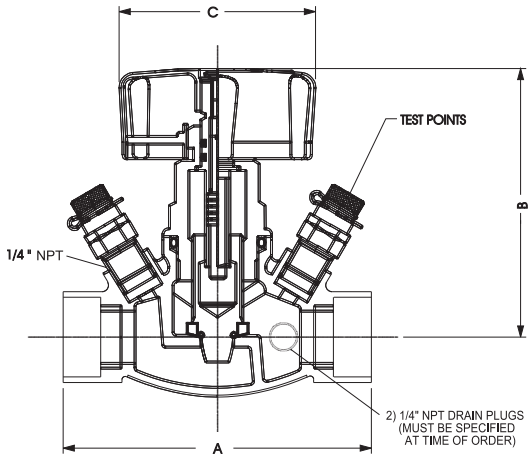

S1710

Material List

PART	SPECIFICATION
1. Body	DZR Metal
2. Handwheel	Polymer
3. Isolating Stem	DZR Metal
4. Stem Seals	EPDM
5. Regulating Stem	DZR Metal
6. Bonnet	DZR Metal
7. Disc Nut	DZR Metal
8. Disk Seat Ring	DZR Metal
9. Disk "O" Ring	EPDM

DZR METAL

Dezincification of duplex brass, which is a form of corrosion, may occur when in contact with certain aggressive waters.

Dezincification selectively removes zinc from the alloy, leaving behind a porous, copper-rich structure that has little mechanical strength. An in-service valve suffering from Dezincification has a white powdery substance or mineral stains on its exterior surface.

To overcome the problem special copper alloys, which contain an inhibitor and undergo heat treatment, have been developed which are resistant to corrosion by dezincification.

This material is known as DZR metal

DIMENSIONS — WEIGHTS — QUANTITIES

Size		A		B		C		D		T1710		S1710		Master Ctn. Qty.
in	mm	in	mm	in	mm	in	mm	in	mm	lbs	kg	lbs	kg	
1/2	15	3.94	100	3.82	97	2.75	70	1.06	27	1.65	.75	1.65	.75	1
3/4	20	3.94	100	3.82	97	2.75	70	1.26	32	1.98	.90	1.98	.90	1
1	25	4.72	120	4.21	107	2.75	70	1.61	41	3.09	1.40	3.09	1.40	1
1 1/4	32	5.50	140	4.41	112	2.75	70	1.97	50	4.19	1.90	4.19	1.90	1
1 1/2	40	5.90	150	4.41	112	3.74	95	2.16	55	5.07	2.30	5.07	2.30	1
2	50	6.50	165	5.35	136	3.74	95	2.75	70	7.94	3.60	7.94	3.60	1