Lead-Free* 250 PSI CWP Iron Body Grooved Silent Check Valves

Fire Protection • Twin Disc • Grooved Style • Bronze Disc • Nitrile • Spring Actuated

250 PSI/17.2 Bar Non-Shock Cold Working Pressure
Maximum Temperature to 180°F/82°C @ 220 PSI/15 Bar

CERTIFIED LEAD-FREE* BY WQA TO NSF/ANSI 372
CONFORMS TO ANSI/AWWA C606 FOR STEEL IPS PIPE
• UL/ULC LISTED • FM APPROVED

C USA
COMPONENT
LEAD-FREE

MATERIAL LIST

	PART	SPECIFICATION
1.	Body	Ductile Iron ASTM A536 Grade 65-45-12 w/Buna-N (Nitrile) resilient seat molded to body
2.	Disc	Bronze ASTM B584 Alloy C87600
3.	Torsion Spring	Stainless Steel T316 ASTM A313
4.	Disc Hinge Pin	Stainless Steel T316 ASTM A276
5.	Disc Stop Pin	Stainless Steel T316 ASTM A276
6.	Disc Thrust Bearing	Stainless Steel T316 ASTM A240
7.	Hinge Pin Retainer	Steel
8.	Stop Pin Retainer	Steel
9.	Stabilization Sphere	Buna-N
10.	Spacer	Stainless Steel T316 ASTM A276

Sizes 10" and 12" furnished with lifting eyebolt



KG-900-W-LF
Grooved

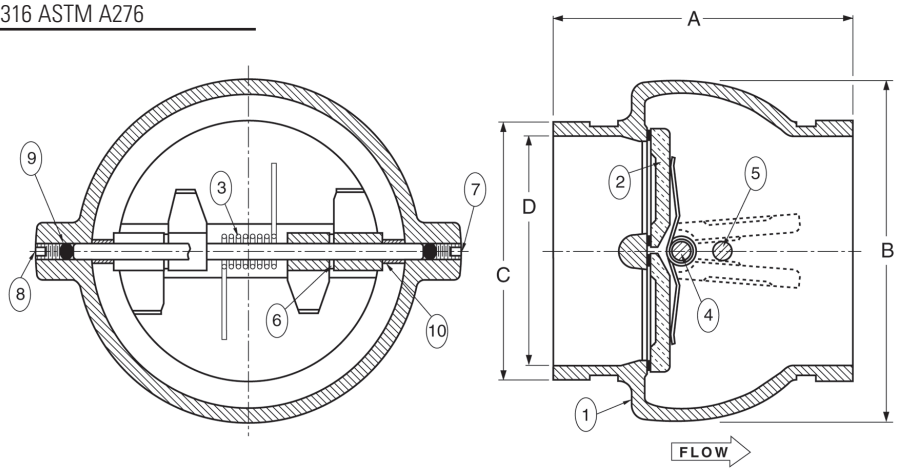

DIMENSIONS—WEIGHTS—QUANTITIES

Size		Dimensions A		B		C		D		KG-920-W-LF	
In.	mm.	In.	mm.	In.	mm.	In.	mm.	In.	mm.	Lbs.	Kg.
2½	65	4.91	125	4.88	124	2.88	73	2.41	61	4.50	2.04
3	80	5.31	135	5.38	137	3.50	89	2.94	75	7.30	3.31
4	100	5.38	137	6.00	152	4.50	114	3.91	99	8.60	3.90
5	125	5.72	145	7.06	179	5.56	141	4.89	124	13.00	5.90
6	150	6.00	152	8.13	206	6.63	168	5.92	150	18.00	8.17
8	200	6.72	171	10.03	255	8.63	219	7.91	201	30.00	13.6
10	250	7.78	198	12.38	314	10.75	273	10.00	254	56.00	25.4
12	300	8.19	208	14.38	365	12.75	324	11.94	303	81.80	36.7

NOTE: Twin Disc Check Valves can be installed horizontally or in the vertical position with flow up.

CAUTION: For horizontal flow applications, the valve must be installed with disc hinge pin in the vertical position to insure proper operation.

WARNING:

1. These are not to be used as steam valves
2. Valves are not to be used near a reciprocating air compressor
3. Install 5 pipe diameters minimum downstream from pump discharge or elbows to avoid flow turbulence. Flow straighteners may be required in extreme cases.

NOTE: On pump discharge, the preferred check valves are in-line spring loaded.

Groove dimensions conform to ANSI/AWWA specification C606 Table 4 (Cut Groove Dimensions)

c UL us LISTED

FM APPROVED

*Lead Free refers to the wetted surface of pipe, fittings and fixtures in potable water systems that have a weighted average lead content ≤ 0.25% per the Safe Drinking Water Act (Sec. 1417) amended 1-4-2011 and other equivalent state regulations.