Class 125 Bronze Ring Check® Valves

Inline Lift Type • Resilient Discs • Spring Actuated

Dezincification Resistant

125 PSI/8.6 Bar Saturated Steam to 353° F/178° C (PTFE Disc)
250 PSI/17.2 Bar Non-Shock Cold Working Pressure



T-480
Threaded



S-480
Solder

MATERIAL LIST

PART	SPECIFICATION
1. Body	Bronze ASTM B 584 Alloy C84400
2. Stem	Stainless Steel ASTM A 582 Alloy C30300
3. Spring	316 Stainless Steel
4. Disc Holder	Stainless Steel Type 301
5. Disc	Water, Oil or Gas (Buna-N) Steam (PTFE) (Y)
6. Seat Screw	Stainless Steel ASTM A 276 Alloy S43000
7. Body End	Bronze ASTM B 584 Alloy C84400

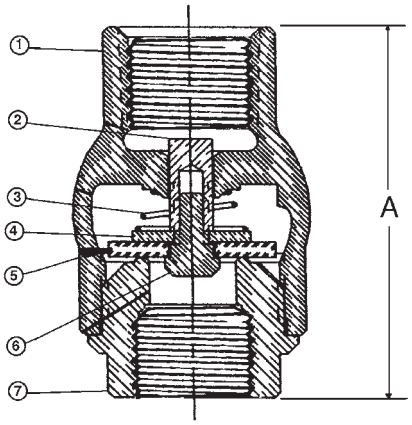

T-480-Y (PTFE Disc)
NPT x NPT

DIMENSIONS—WEIGHTS—QUANTITIES

Size		Dimensions A		B		C		T-480		S-480		Master
In.	mm.	In.	mm.	In.	mm.	In.	mm.	Lbs.	mm.	Lbs.	Kg.	Ctn. Qty.
⅜	10	2.00	51	1.38	35	1.44	37	0.41	0.19	0.44	0.20	100
½	15	2.06	52	1.38	35	1.19	30	0.36	0.16	0.40	0.18	100
¾	20	2.25	57	1.63	41	1.31	33	0.48	0.22	0.52	0.24	100
1	25	2.63	67	2.00	51	1.50	38	0.77	0.35	0.85	0.39	50
1 ¼	32	2.94	75	2.38	60	1.69	43	1.14	0.51	1.28	0.58	30
1 ½	40	3.31	84	2.75	70	2.00	51	1.63	0.74	1.75	0.79	30
2	50	3.69	94	3.38	86	2.31	59	2.27	1.03	2.70	1.23	10

Ordering: The T-480 and S-480 both have standard Buna-N Discs.
Also available with PTFE (Y) Discs; specify T-480-Y or S-480-Y.
⅜" thru 2" require ½ pound pressure to open.

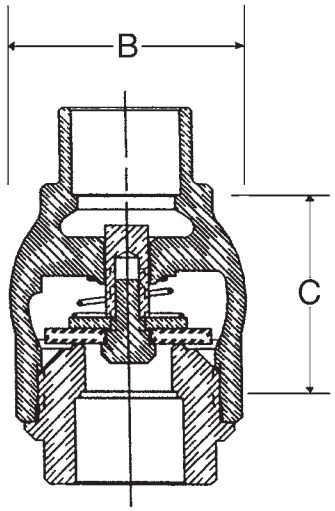

S-480-Y (PTFE Disc)
C x C

NIBCO® Check Valves may be installed in both horizontal and vertical lines with upward flow or in any intermediate position.

◆ For detailed Operating Pressure, refer to Pressure Temperature Chart on page 113.

Warning – Do Not Use For Reciprocating Air Compressor Service.

NIBCO INC. WORLD HEADQUARTERS • 1516 MIDDLEBURY ST. • ELKHART, IN 46516-4740 • USA • PH: 1.800.234.0227
TECH SERVICES PH: 1.888.446.4226 • FAX: 1.888.234.0557 • INTERNATIONAL OFFICE PH: +1.574.295.3327 • FAX: +1.574.295.3455
www.nibco.com