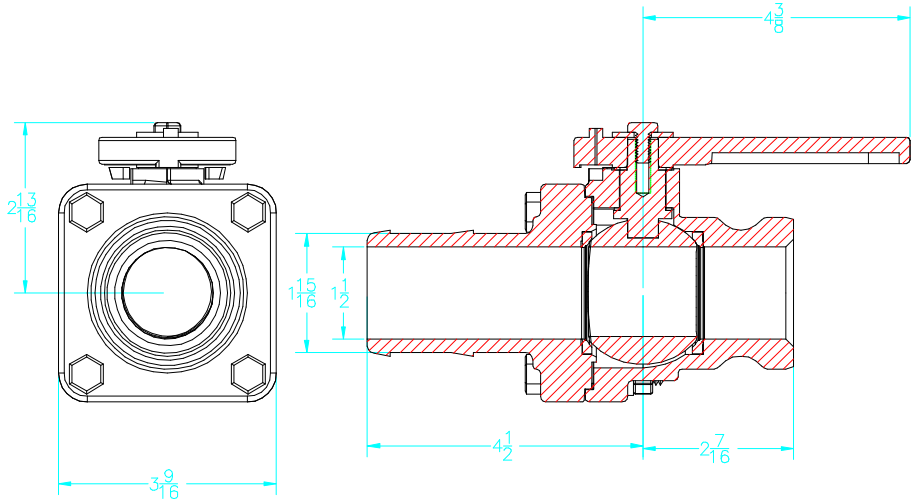

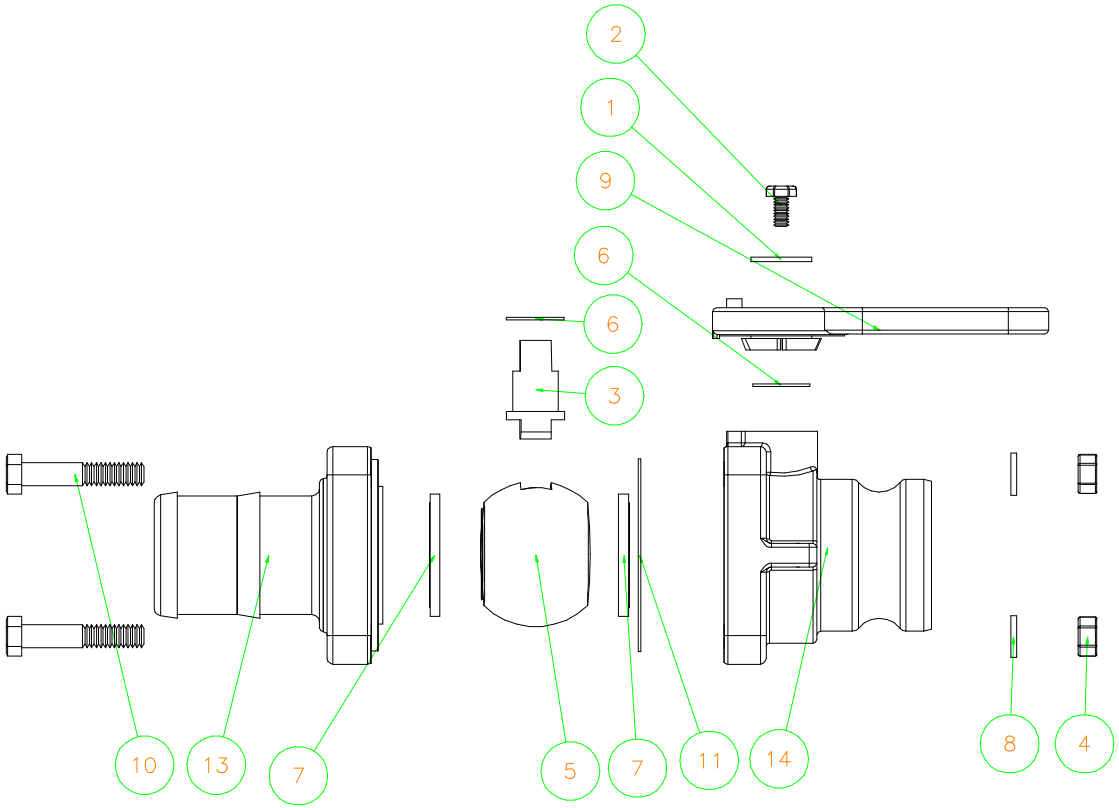

Parts List

ITEM	QTY	PART NO.	DESCRIPTION
1	1	V20021	HANDLE WASHER
2	1	V20020	HANDLE BOLT
3	1	VS20151	STEM
4	4	V20019Z	3/8" HEX NUT
5	1	VS20255	BALL
6	2	V20060	THRUST BEARING
7	2	VS20258A	BALL SEAT
8	4	V20018	3/8" LOCKWASHER
9	1	VS20152SH	HANDLE
10	4	V20010SS	3/8–16 X 2" HHCS
11	1	V21204	END PLATE GASKET
13	1	VSHB20256	2" HB END PLATE
14	1	VF20254	Body

THIS DRAWING AND ALL INFORMATION CONTAINED THEREON ARE THE EXCLUSIVE PROPERTY OF BANJO CORPORATION. UNLESS SPECIFICALLY NOTED, THIS DRAWING AND ITEMS SHOWN ON THIS DRAWING ARE SUBJECT TO CHANGE AT ANY TIME.

BANJO®
LIQUID HANDLING PRODUCTS

BANJO CORPORATION
150 BANJO DR. * CRAWFORDSVILLE, IN 47933

PART NO.
VSFHB200

TITLE
2" HOSE BARB END PLATE W/ F ADAPTER