Parts List			
Item	Description	Material	Cn
1	V35254	20%GFPP	1
2	V25151B	30%GFPP	1
3	V25060	PTFE	1
4	V25160	PTFE	1
5	V25121	18-8SS	1
6	V25020	18-8SS	1
7	V25153	30%GFPP	1
8	V35255A	30%TFPP	1
9	V35258A	PTFE	2
10	V35278	20%GFPP	1
11	V35278	20%GFPP	1
12	V20018	18-8SS	6
13	V20019	18-8SS	6
14	V35017	18-8SS	6
15	V25163	Viton	1
16	V35265	Viton	2

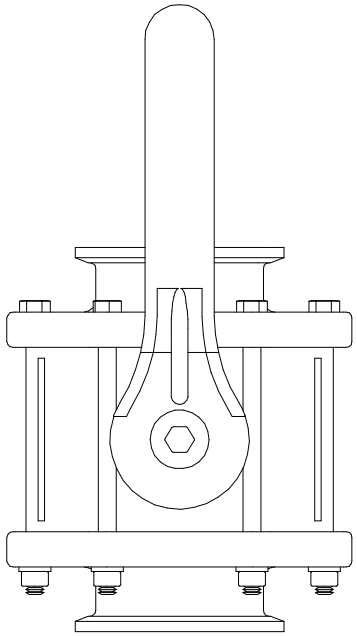

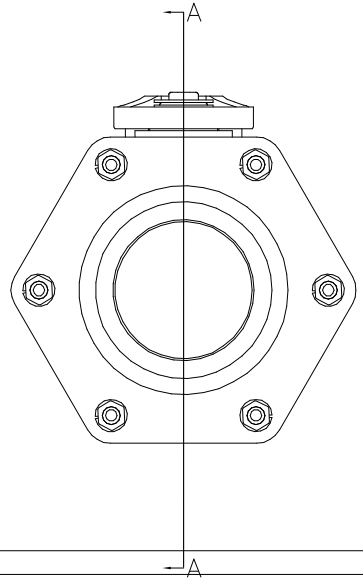

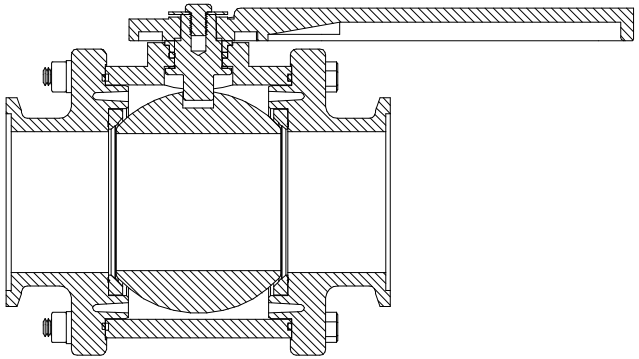

SECTION A-A

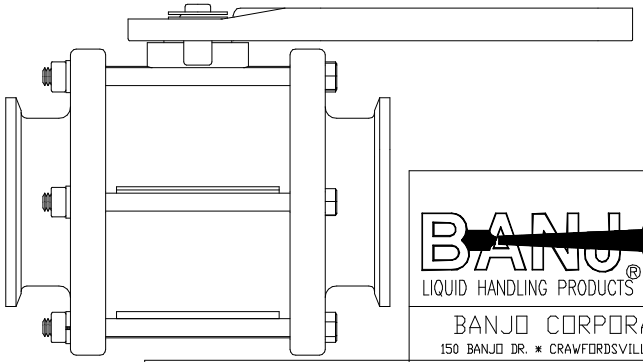

THIS DRAWING AND ALL INFORMATION CONTAINED THEREON ARE THE EXCLUSIVE PROPERTY OF BANJO CORPORATION. UNLESS SPECIFICALLY NOTED, THIS DRAWING AND ITEMS SHOWN ON THIS DRAWING ARE SUBJECT TO CHANGE AT ANY TIME.

BANJO®
LIQUID HANDLING PRODUCTS

BANJO CORPORATION
150 BANJO DR. * CRAWFORDSVILLE, IN 47933

PART NO.
MV300CF

TITLE
3"FP Manifold Valve