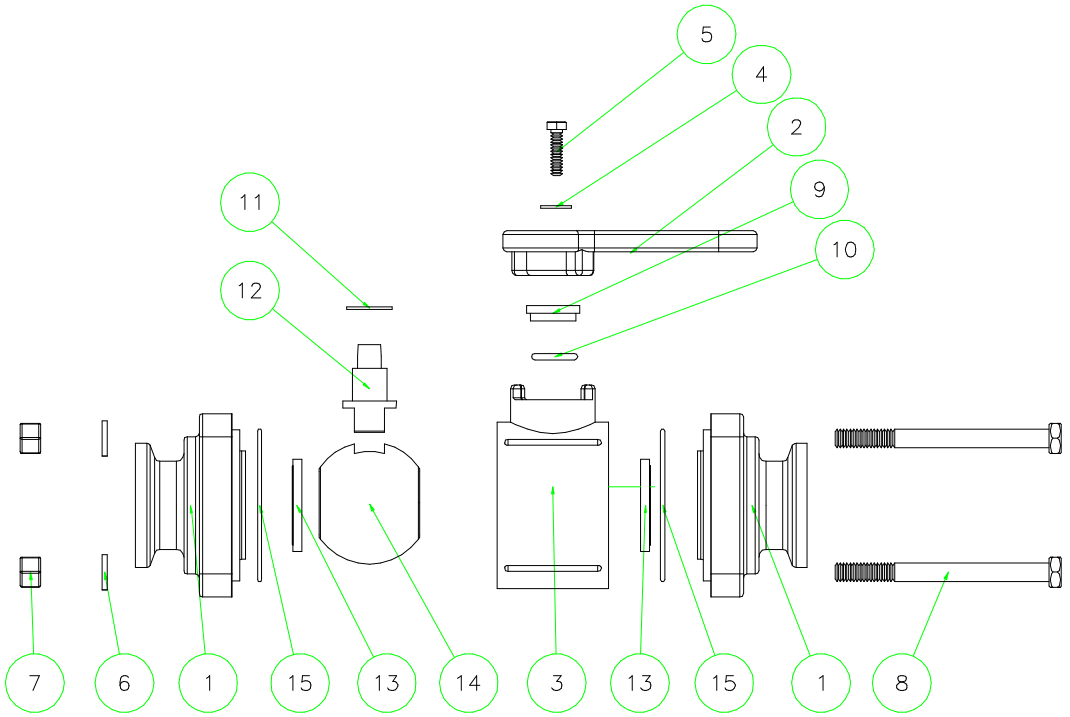

Parts List			
Item	Qty	PART NO.	DESCRIPTION
1	2	V10278	1" MANIFOLD STYLE EP
2	1	V10153A	1" FP HANDLE
3	1	V10254	1" FP VALVE BODY
4	1	V07021A	HANDLE WASHER
5	1	V10020A	HANDLE BOLT
6	4	V10118	LOCKWASHER
7	4	V10119	BODY NUT
8	4	V10117	BODY BOLT
9	1	V10159	UPPER STEM BUSHING
10	1	V10163	STEM O-RING
11	1	V10060	THRUST BUSHING
12	1	V10151A	STEM
13	2	V10258A	SEAT
14	1	V10155	BALL
15	2	V10264	BODY O-RING

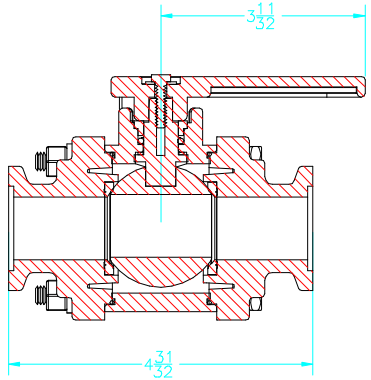

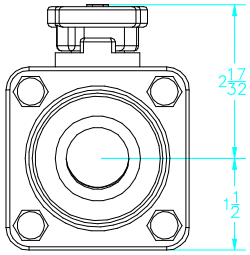

BANJO®
LIQUID HANDLING PRODUCTS

BANJO CORPORATION
150 BANJO DR. * CRAWFORDSVILLE, IN 47933

THIS DRAWING AND ALL INFORMATION CONTAINED THEREON ARE THE EXCLUSIVE PROPERTY OF BANJO CORPORATION. UNLESS SPECIFICALLY NOTED, THIS DRAWING AND ITEMS SHOWN ON THIS DRAWING ARE SUBJECT TO CHANGE AT ANY TIME.

PART NO.
MV100CF

TITLE
1" FULL PORT W/ C-FLANGE