Parts list			
Item	Description	Cn	Note
1	BF304A	4	BOLTED FLANGE PLUG
2	BF306	4	2 3/4" HEX HEAD CAP SCREW
3	BF221BD	1	2" FP (4) BOLT BOTTOM FLANGE
4	BF200GFE	4	2" BOTTOM DRAIN FOOT GASKET
5	BF220_TANK_SECTION	1	CUSTOMER TANK WALL
6	BF220GE	1	2" FP (4) BOLT B.T.F. GASKET
7	BF278	1	2" FP MANIFOLD FLANGE
8	V20018	4	LOCKWASHER
9	V20019	4	HEX NUT
10	VL1004	1	EPDM STICKER (NOT SHOWN)

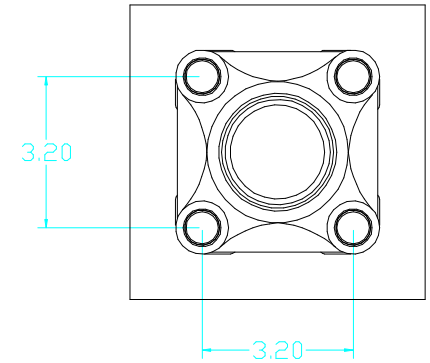

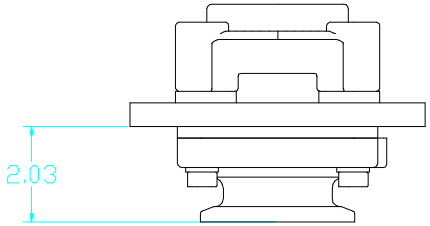

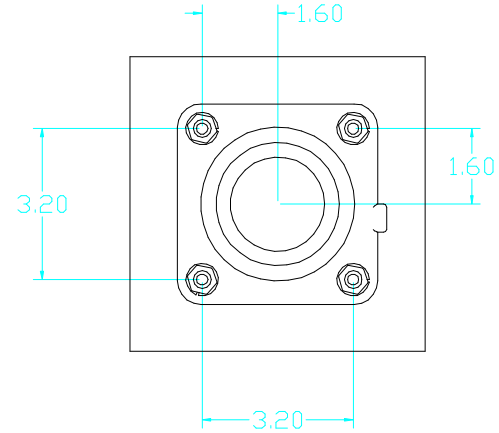

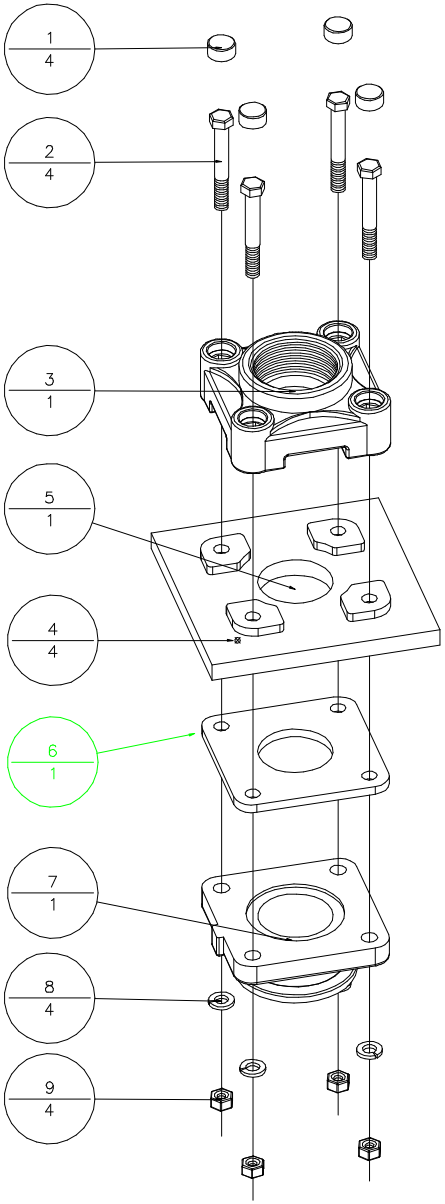

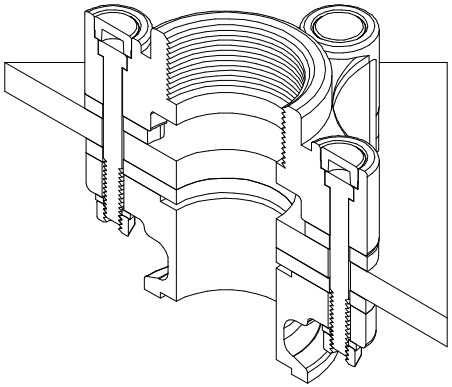

BANJO
LIQUID HANDLING PRODUCTS

BANJO CORPORATION
150 BANJO DR. * CRAWFORDSVILLE, IN 47933

TOLERANCES UNLESS OTHERWISE SPECIFIED	PART NO.	TITLE	
DECIMALS .00 = +/-.010	MBF220BD	2" FP (4) Bolt Bottom Drain Fitting	
DECIMALS .000 = +/-.005	DWN ETQ	DATE 10/13/99	SCALE 1"=1"
FRACTIONS 1/2 = +/-1/32	APP.	DATE	SHEET SIZE E
ANGLES +/-1	DWG NO. MBF220BD.DWG		REV 0
BREAK ALL SHARP CORNERS W/ 1/32 R UNLESS OTHERWISE SPECIFIED	SHEET: 1 OF 1		

No.	ECN#	Location	Description	Drawn By	Date