*NOTE:
ADDITIONAL CLEARANCE REQ'D
FOR SCREEN REMOVAL: 8"

Parts List			
Item	Qty	Part No.	Description
1	1	LST150B	T STRAINER BOWL
2	1	LSQ200R1	PLUG ORING
3	1	LST150G	T STRAINER GASKET
4	1	LSQ200PL	DRAIN PLUG
5	1	LST150H	T STRAINER HEAD
6	1	LST1580	STRAINER SCREEN

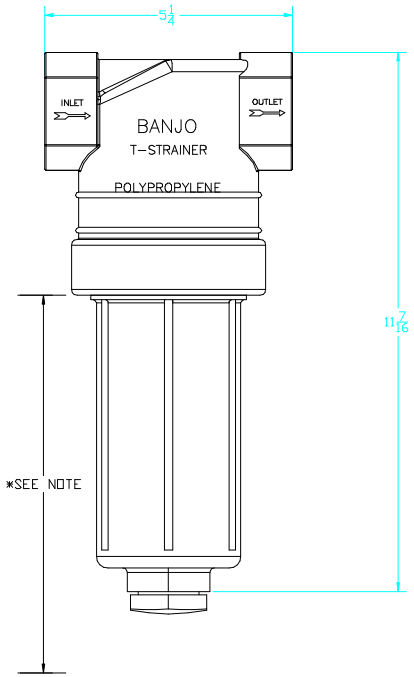

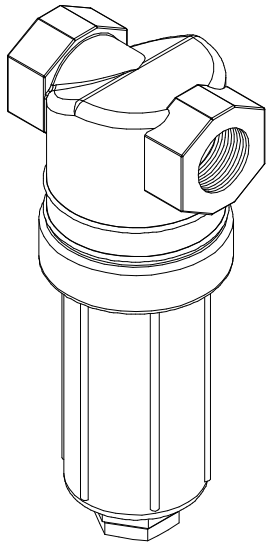

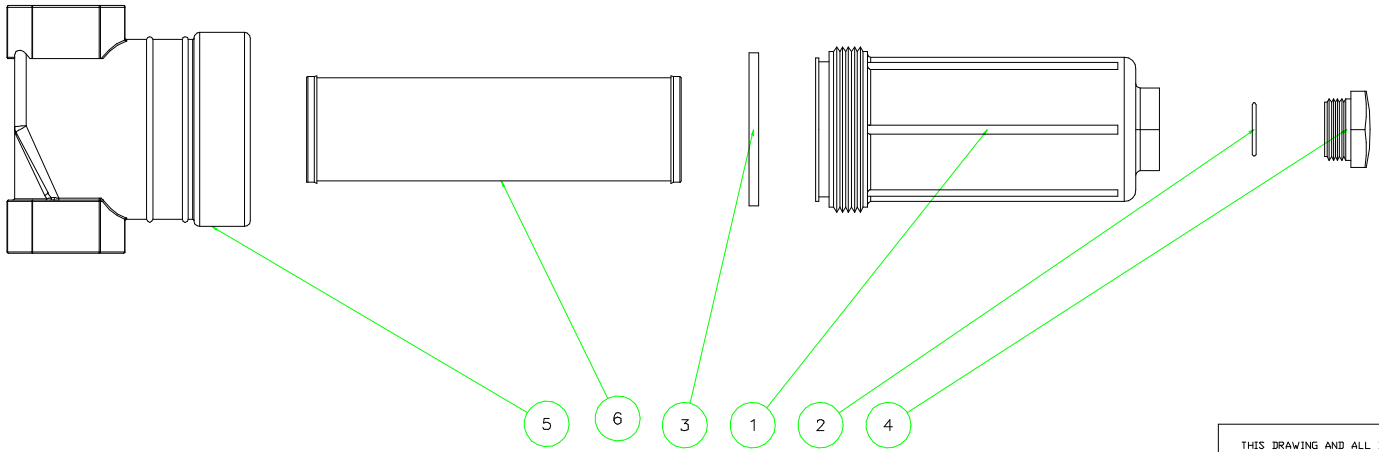

BANJO®
LIQUID HANDLING PRODUCTS

BANJO CORPORATION
150 BANJO DR. * CRAWFORDSVILLE, IN 47933

THIS DRAWING AND ALL INFORMATION CONTAINED THEREON ARE THE EXCLUSIVE PROPERTY OF BANJO CORPORATION. UNLESS SPECIFICALLY NOTED, THIS DRAWING AND ITEMS SHOWN ON THIS DRAWING ARE SUBJECT TO CHANGE AT ANY TIME.

PART NO.
LST150-80

TITLE
'T' STRAINER ASSEMBLY W/ #80 MESH SCREEN