*NOTE:
ADDITIONAL CLEARANCE REQ'D
FOR SCREEN REMOVAL: 5 3/4"

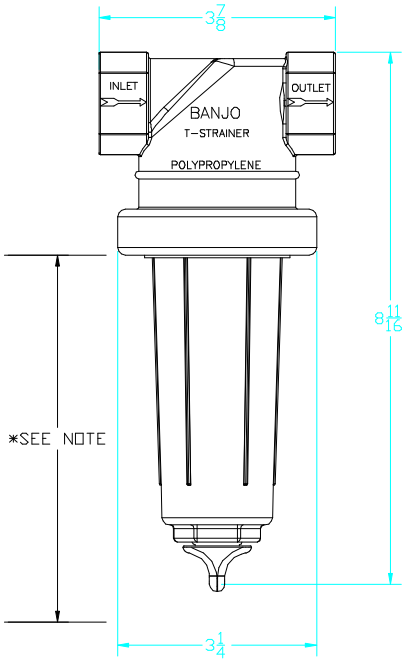

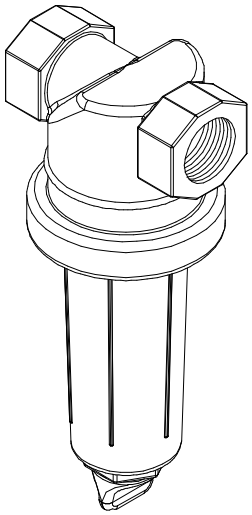

Parts List			
Item	Qty	Part No.	Description
1	1	LST116	"T" STRAINER SCREEN
2	1	12777	DRAIN PLUG
3	1	UV15163	PLUG O-RING
4	1	LST100B	"T" STRAINER BODY
5	1	LST100G	BODY O-RING EPDM
6	1	LST100H	T STRAINER HEAD

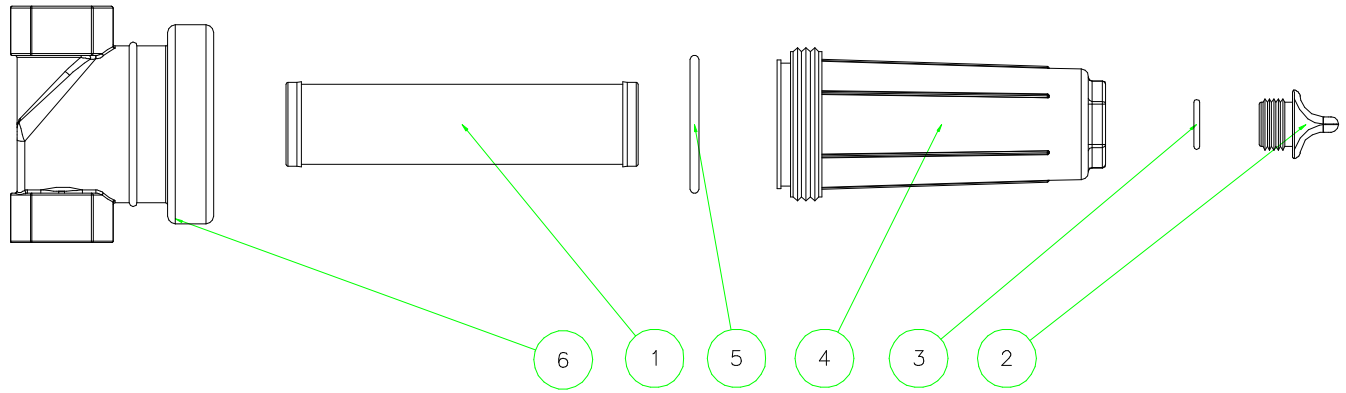

THIS DRAWING AND ALL INFORMATION CONTAINED THEREON ARE THE EXCLUSIVE PROPERTY OF BANJO CORPORATION. UNLESS SPECIFICALLY NOTED, THIS DRAWING AND ITEMS SHOWN ON THIS DRAWING ARE SUBJECT TO CHANGE AT ANY TIME.

BANJO®
LIQUID HANDLING PRODUCTS

BANJO CORPORATION
150 BANJO DR. * CRAWFORDSVILLE, IN 47933

PART NO.
LST100-16

TITLE
"T" STRAINER ASSEMBLY W/ #16 MESH SCREEN