*NOTE:
ADDITIONAL CLEARANCE REQ'D
FOR SCREEN REMOVAL: 5 1/4"

Parts List			
Item	Qty	Part No.	Description
1	1	LS100G	LINE STRAINER GASKET
2	1	LS100XC1	LINE STRAINER CAP
3	1	12777	DRAIN PLUG
4	1	UV15163	PLUG GASKET
5	1	LS180	LINE STRAINER SCREEN
6	1	LS125B	LINE STRAINER BODY

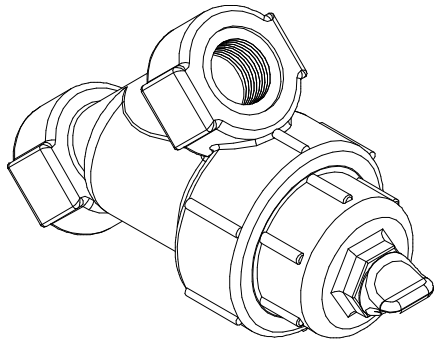

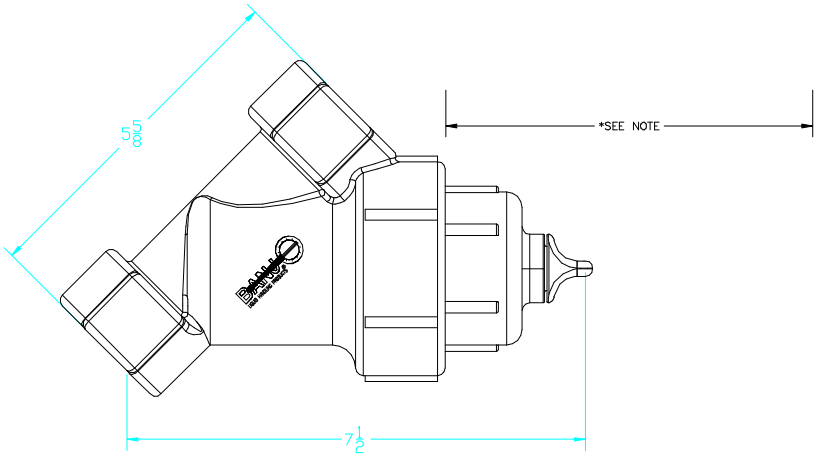

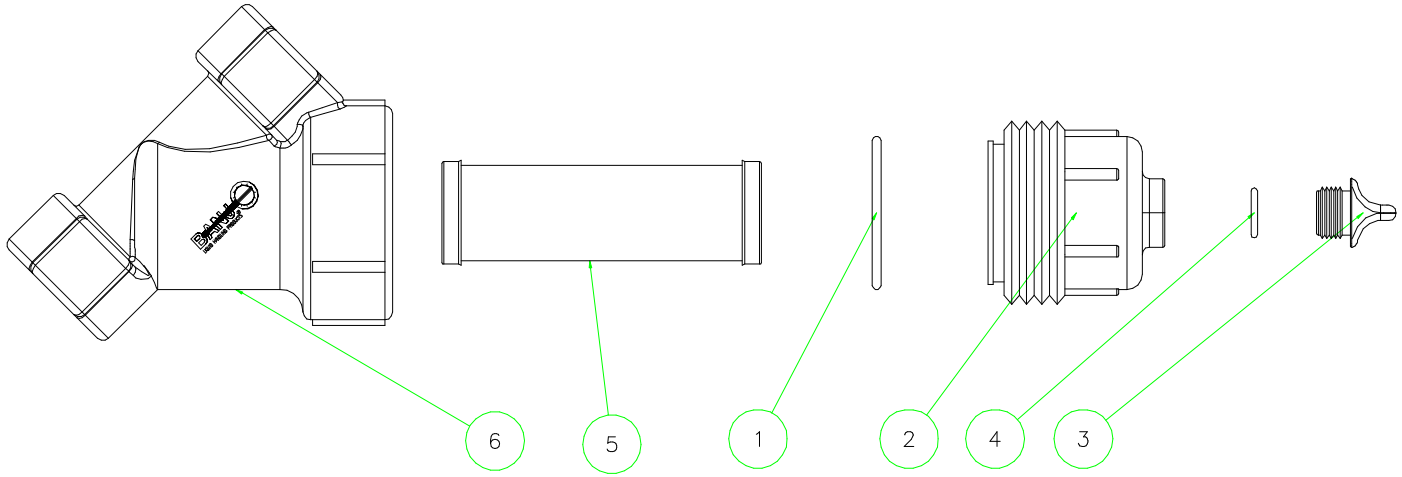

BANJO®
LIQUID HANDLING PRODUCTS

BANJO CORPORATION
150 BANJO DR. * CRAWFORDSVILLE, IN 47933

THIS DRAWING AND ALL INFORMATION CONTAINED THEREON ARE THE EXCLUSIVE PROPERTY OF BANJO CORPORATION. UNLESS SPECIFICALLY NOTED, THIS DRAWING AND ITEMS SHOWN ON THIS DRAWING ARE SUBJECT TO CHANGE AT ANY TIME.

PART NO.
LS125-80

TITLE
1 1/4" LINE STRAINER W/ #80 MESH SCREEN