

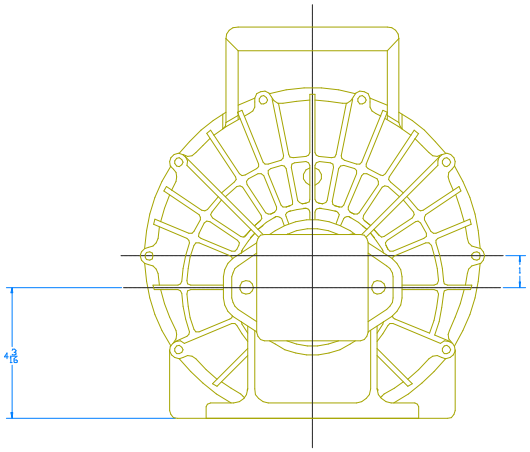

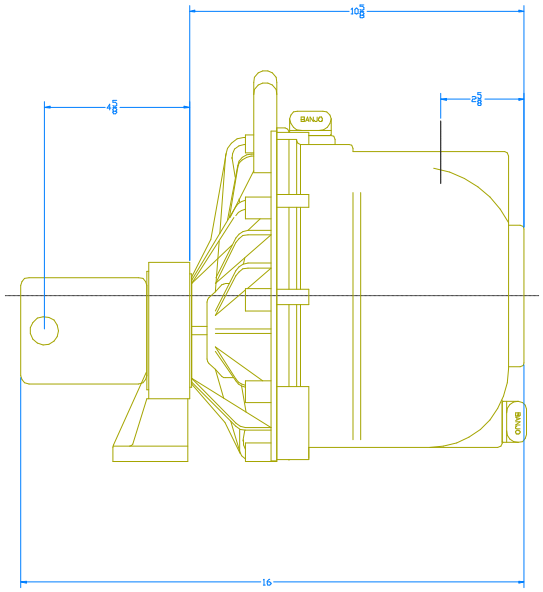

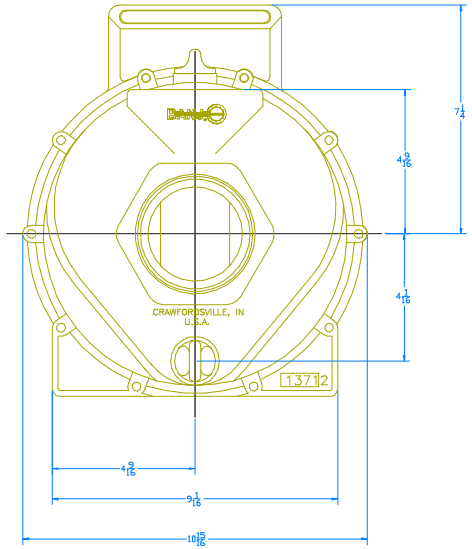

LIQUID HANDLING PRODUCTS

BANJO CORPORATION

150 BANJO DR. * CRAWFORDSVILLE, IN 47933

THIS DRAWING AND ALL INFORMATION CONTAINED THEREON ARE THE EXCLUSIVE PROPERTY OF BANJO CORPORATION. UNLESS SPECIFICALLY NOTED, THIS DRAWING AND ITEMS SHOWN ON THIS DRAWING ARE SUBJECT TO CHANGE AT ANY TIME.

PART NO.

300PHY

TITLE

3" POLY PUMP W/ HYD. DRIVE