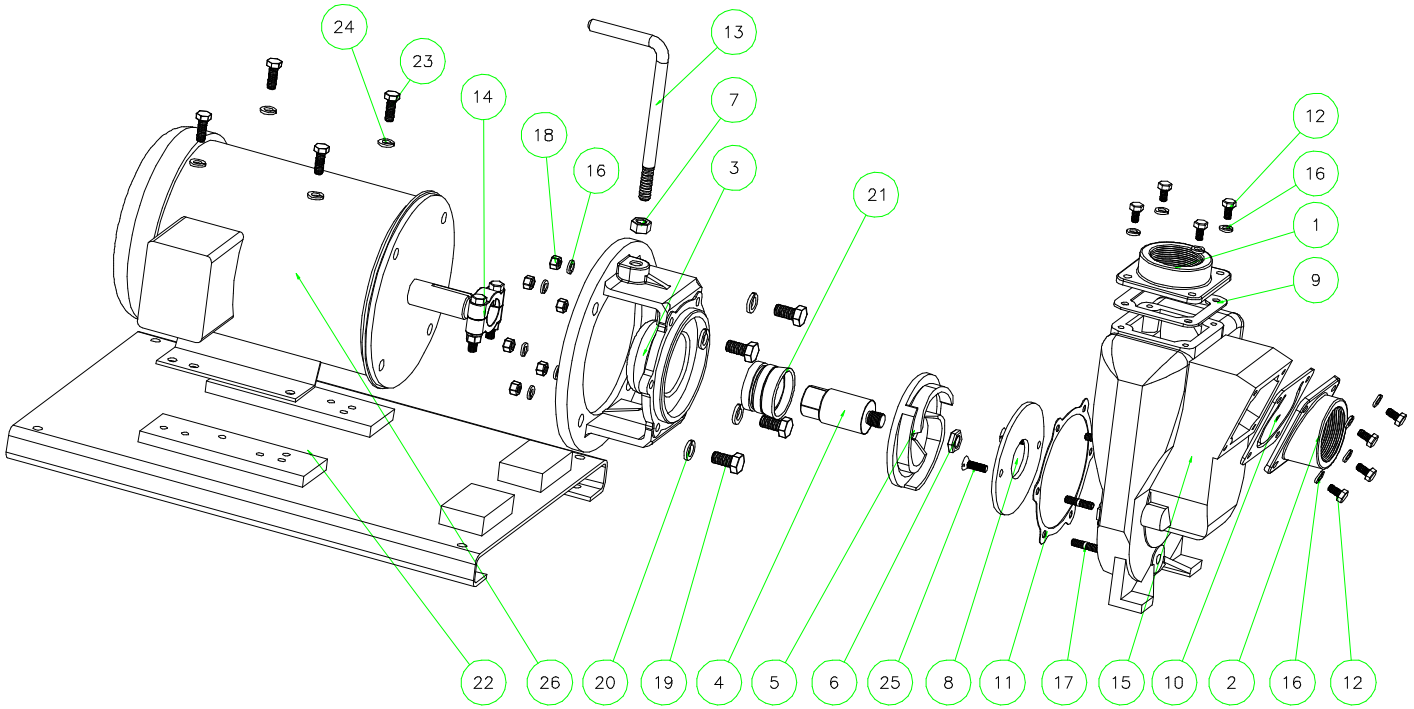

Parts List			
Item	Qty	PART NO.	DESCRIPTION
1	1	17000	2" OUTLET FLANGE
2	1	17002	2", 20 INLET FLANGE
3	1	17446	2" PUMP ADAPTER
4	1	17406	2" IMPELLER SHAFT
5	1	17408	2" PUMP IMPELLER
6	1	17009B	IMPELLER NUT
7	1	17010	1/2"-13 HEX NUT
8	1	17011	WEAR PLATE
9	1	17013	OUTLET GASKET
10	1	17016	GASKET & CHECK VALVE
11	1	17018	ADAPTER GASKET
12	8	17019	5/16"-18 X 3/4" HHCS
13	1	17022	HANDLE
14	1	18129	CLAMP ASSY W/ KEY
15	1	17026	PUMP HOUSING
16	14	V10118	5/16" LOCKWASHER
17	6	17042	5/16" HOUSING STUD
18	6	V10119	5/16"-18 HEX NUT
19	4	17449	1/2"-13 X 1.25 HHCS
20	4	18058	1/2 SPLIT LOCKWASHER
21	1	18125	3" PUMP SEAL ASSY
22	1	17701	2" BASE PLATE
23	4	17704	3/8"-16 X 1.25" HHCS
24	4	V20018	3/8" LOCKWASHER
25	2	17030	C'SINK FLT HD SCREW
26	1	BEM5	BALDOR ELEC. MTR.

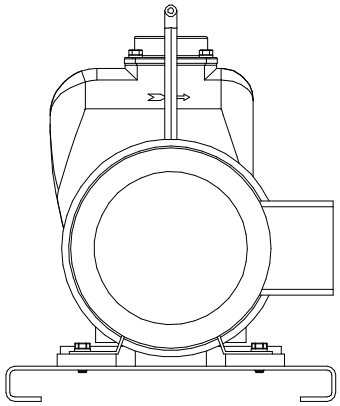

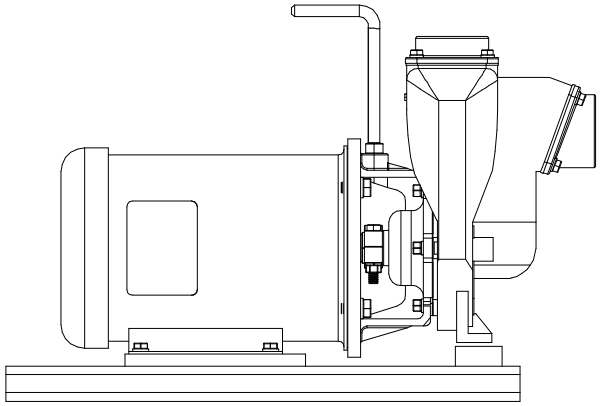

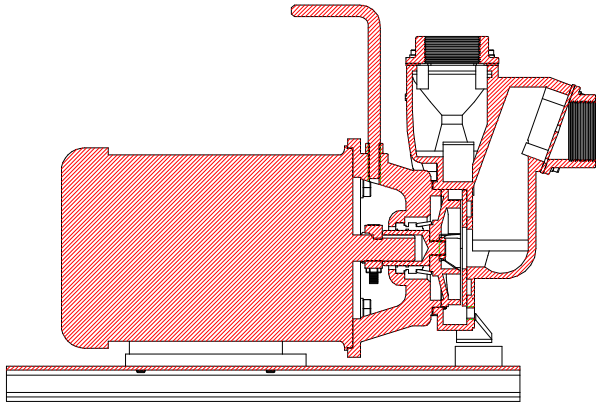

BANJO®
LIQUID HANDLING PRODUCTS

BANJO CORPORATION
150 BANJO DR. * CRAWFORDSVILLE, IN 47933

THIS DRAWING AND ALL INFORMATION CONTAINED THEREON ARE THE EXCLUSIVE PROPERTY OF BANJO CORPORATION. UNLESS SPECIFICALLY NOTED, THIS DRAWING AND ITEMS SHOWN ON THIS DRAWING ARE SUBJECT TO CHANGE AT ANY TIME.

PART NO.
234PIE5

TITLE
5HP ELECTRIC DRIVE 2" PUMP